MANUAL

OF

ARBORICULTURE,

BOMBAY PRESIDENCY.

1912.

BOMBAY
PRINTED AT THE GOVERNMENT CENTRAL PRESS
1913.

[*Price—Rs.* ~~1-4-0~~ *or* ~~1s. 10d.~~]

OFFICIAL AGENTS FOR THE SALE OF INDIAN OFFICIAL PUBLICATIONS.

In England.

Constable & Co., 10, Orange Street, Leicester Square, W. C. London.
Grindlay & Co., 54, Parliament Street, S. W., London.
Henry S. King & Co., 65, Cornhill, E. C., London.
P. S. King & Son, 2 & 4, Great Smith Street, Westminster, S. W., London.
Kegan Paul, Trench, Trübner & Co., 68–74, Carter Lane, E. C., London.
B. Quaritch, 11, Grafton Street, New Bond Street, W., London.
T. Fisher Unwin, 1, Adelphi Terrace, London, W. C.
W. Thacker & Co., 2, Creed Lane, London, E. C.
Luzac & Co., 46, Great Russel Street, London, W. C.
B. H. Blackwell, 50 & 51, Broad Street, Oxford.
Deighton Bell & Co., Cambridge.

On the Continent.

Friedlander & Sohn, 11, Carlstrasse, Berlin.
Otto Harrassowitz, Leipzig.
Karl W. Hiersemann, Leipzig.
Ernest Leroux, 28, Rué Bonaparte, Paris.
Martinus Nijhoff, The Hague.

In India.

Higginbotham & Co., Madras.
V. Kalyanarama Iyer & Co., Madras.
P. R. Rama Iyar & Co., Madras.
Thacker, Spink & Co., Calcutta.
W. Newman & Co., Calcutta.
S. K. Lahiri & Co., Calcutta.
R. Cambray & Co., Calcutta.
Thacker & Co. (Ld.), Bombay.
A. J. Combridge & Co., Bombay.
Superintendent, Government Central Press, Bombay.
D. B. Taraporevala, Sons & Co., Bombay.
Sunder Pandurang, Bookseller, etc., Bombay.
Gopal Narayen & Co., Booksellers, etc., Bombay.
N. M. Tripathi & Co., Booksellers, etc., Bombay.
Mrs. Radhabai Atmaram Sagoon, Bookseller, etc., Bombay.
Ramchandra Govind & Son, Booksellers, etc., Bombay.
N. B. Mathur, N. K. H. Press, Allahabad.

MANUAL

OF

ARBORICULTURE,

BOMBAY PRESIDENCY

1912.

BOMBAY
PRINTED AT THE GOVERNMENT CENTRAL PRESS
1913.

Digitized by the Internet Archive
in 2020 with funding from
Public.Resource.Org

https://archive.org/details/manualofarboricu00bomb

AMENDMENT SLIPS.

Number.	Paragraph.	Subject.

AMENDMENT SLIPS.

Number.	Paragraph.	Subject.

AMENDMENT SLIPS.

Number.	Paragraph.	Subject.

CONTENTS.

	PAGE
CHAPTER I—Preliminary	1
CHAPTER II—Administration and Control.	
Administrative and financial control	3
Technical control	3
Executive control	3
Allotments	4
Nurseries	4
Plantations	5
Groves	5
Avenues	5
Staff	5
Working plans and maps	7
Control books	8
Reports and returns	8
Scope of operation	9
CHAPTER III—Working Plans.	
General instructions	11
Choice of roads	11
Choice of trees	12
Location of nurseries	12
Responsibility for execution of the plan	13
Alterations in plans	13
Map of avenues	13
CHAPTER IV—Tools required for Arboricultural Works ...	14
CHAPTER V—Collection and preparation of Seed.	
Collecting seed	15
Clearing seed and preparing it for sowing	15
Preservation of seed	16
Testing seed	17
Quantity of seed required	17
CHAPTER VI—The Nurseries.	
General	19
Selection of site	19
Temporary nurseries	19
Permanent nurseries	19
Size of nursery	20
Soil	20
Laying out the nursery	23
Manuring the soil	23
Laying out the nursery beds	24
Staff	24

PAGE

CHAPTER VII—Raising seedlings in the Nursery
Preparation of the beds before sowing 25
Sowing the seed 25
Season for sowing 26
Treatment of seeds after sowing; watering 26
Noxious animals and vermin 26
Shading the seed-beds 26
Weeding the seed-beds 27
Aerating the seed-beds 27
Thinning out the seedlings 27

CHAPTER VIII—Raising seedlings and cuttings in pots and baskets.
Growing trees in pots 28
Growing plants in baskets 29
Soil in pots and baskets 29
Watering plants in pots 29

CHAPTER IX—Raising trees from cuttings in Nurseries.
Theory of striking cuttings 30
The cutting 30
Soil 31
Setting the cuttings 31
Watering 31
Care of cuttings 32

CHAPTER X—Reproduction by Root-suckers.
Best way of obtaining suckers 33
Propagation of date-palms and bamboo 33
Coppicing and pollarding 33

CHAPTER XI—Treatment of young trees in the Nursery.
General 35
Transplanting seedlings in the Nursery 36
Planting out in the nursery lines 37
Subsequent transplanting 37

CHAPTER XII—Raising trees from long cuttings at roadside... 39

CHAPTER XIII—Planting out trees by the roadside.
Size and age at which the trees are to be planted out ... 41
Season for planting 41
Selection of plants in the nursery 42
Lifting the young plants with and without earth 42
Transporting the young trees 42
Location of pits 43
Preparing pits 44
Soil for filling the pits 44
Providing arrangements for watering 44
Planting the tree 45
Level of planting 46
Protecting the young trees 47
Watering 47

PAGE

CHAPTER XIV—MAINTENANCE; PROTECTION.
General 49
Different forms of guards 49

CHAPTER XV—MAINTENANCE; WATERING.
Need of irrigation 53
Water-supply 53
Conveyance to trees 53
Application of water 53
Loosening the surface soil 54
Special measures in droughts 54

CHAPTER XVI—MAINTENANCE; MISCELLANEOUS.
General 55
Pruning 55
Straightening crooked trees 55
Replacing failures 55
Termination of maintenance 55
Removal of tree-guards 56

CHAPTER XVII—MANAGEMENT OF AVENUES; PRUNING.
General 57
Pruning 57
Forming straight boles in young roadside trees 57
Axes not to be used in pruning 58
Season for pruning 59
Cavities in tree trunks 59
Bark, or hide-bound trees 59

CHAPTER XVIII—MANAGEMENT OF AVENUES; POLLARDING, LOPPING AND FELLING.
Pollarding 60
Lopping 60
Season for pollarding or lopping 60
Prevention of injury 60
Felling—Age at which to fell 61

CHAPTER XIX—MANAGEMENT OF AVENUES; REALIZATION OF INCOME.
Sources of income 62
Felling 62
Lopping 62
Grass 62
Conditions of sale of grass 62

CHAPTER XX—PROVISION OF AVENUES IN SIND.
General 63
Choice of trees 63
Nurseries 64
Planting trees at the road side 64
Time of planting 65
Watering 65
Protection 65
Pruning 66
Staff 66

PAGE

CHAPTER XXI—PLANTING BY PRIVATE PERSONS.
Permission to plant 67
Conditions 67
Grant of sanad 68
Register of trees planted 68
Testing 68
Register for provincial roads 68

CHAPTER XXII—GROVES.
Encamping grounds 69
Groves on barren roads 69
Special methods of planting on barren land 69

CHAPTER XXIII—SELECTION OF TREES FOR AVENUES.
List of trees 71

APPENDICES.

	PAGE
Appendix A—Form of working plan of operations	84
Appendix B—Form of control book	86
Appendix C—Form of abstract estimate for arboricultural operations.	87
Appendix D—Statement of arboricultural receipts and expenditure ...	88
Appendix E—Forms of quinquennial statements showing progress in arboriculture and the income from and expenditure on arboriculture	89
Appendix F—Register of trees planted	95
Appendix G—Form of sanad of ownership of trees planted by private persons on Government roads	96
Appendix H—Scale of rewards sanctioned for the Amritsar District by the District Board	98
Appendix I—Simple insecticides	99
Appendix J—Mr. Ashburner's Circular	100

LIST OF ILLUSTRATIONS.

		PAGE
Plate I	—Arboricultural tools	14
Plate II	—Plan of a permanent nursery	21
Plate III	—Sowing board	25
Plate IV	—Some forms of tree guards	49

CHAPTER I.

Preliminary.

The question of the provision and maintenance of trees along roadsides is one of real importance because of the welcome shade afforded thereby to wayfarers, the substantial addition to the beauties of the landscape, and the mitigation of the discomforts of long journeys by road. The practice of planting avenues of this description was in earlier days as much a feature of British administration as the construction of the roads themselves; and some of the older avenues on the main roads of India still supply the most agreeable of memorials to the taste and prevision of their founders. The practice has nowhere died out, and it is still fairly widely, though intermittently and unmethodically, pursued. In recent years, however, great havoc has been caused in some tracts by the mutilation and cutting down of timber in times of famine; and observation tends to show that these ravages have only been partially repaired. In other parts of the country the importance of the matter appears to have been imperfectly kept in view, and, from the want of a sustained policy, money and effort have been wasted, and in many places avenues formerly in existence have been allowed to disappear or to become disfigured by unsightly blanks.

2. Government desire that the practice of planting and maintaining avenues along public roads shall now be taken up vigorously and systematically and have ordered the preparation of this Manual with the object of securing efficient work and steady progress, and ensuring that effort shall be concentrated and properly directed on a pre-arranged system.

3. This work must, in future, be treated as an integral part of road maintenance, and should be considered, in allotting funds, in conjunction with the maintenance of the roadway and bridges. These avenues will in course of time become a very valuable property, and all reasonable measures should be encouraged that can be taken by the authority in charge to secure an income from them, while steadily keeping in view the main object, which is to provide a continuous row of healthy trees giving shade, especially in the hot weather, each having ample room to develop its natural shape. But each authority responsible for the construction and upkeep of any road must look to the net expenditure, rather than to the gross expenditure, on this object and, until the needful roadside avenues on all the roads in its charge are completed, should spend on arboriculture a sum at least equal to

the income derived from the existing roadside trees. Every such authority is required to keep a separate account of its income from and expenditure on arboriculture ; *vide* Appendix D.

4. Good results have been obtained in some places by entrusting certain supplementary work, such as the planting of detached pieces of road or the filling of blanks in avenues, to village or private agency and paying by results, and in others private enterprise has been stimulated by rewards and by revenue-free grants. The encouragement of private tree-planting by these and other means is worthy of special attention.

5. It is essential that, as far as possible, the sympathies of the neighbouring population should be enlisted in the preservation of the roadside trees. In the case of fruit-trees, the produce of which is of little value, the cultivators of the adjoining fields should be allowed to take the fruit on condition that they protect the trees from serious damage. And when a fodder famine is prevalent judicious arrangements should be made to utilise the edible leaves of trees along roadsides as fodder for the cattle. This does not mean that the trees themselves should be heedlessly mutilated or cut down, but that a temporary sacrifice of sylvan amenity may be gladly accepted in the interest of saving valuable animal life. The practice of lopping or otherwise injuring a beautiful avenue for the purpose of the reception of a high Government official, or the passing of a party or procession in carriages is forbidden.

6. This Manual has been compiled from the Manuals of Arboriculture in force in the Punjáb and the United Provinces, sections and paragraphs being adopted *verbatim* where suitable. In addition considerable assistance has been obtained from *A Handbook of Tropical Gardening and Planting* by Mr. H. F. Macmillan, the Curator of the Royal Botanic Gardens, Peradeniya. Reference to this excellent book and to other books on Indian Gardening is recommended. Acknowledgment is also due to Mr. C. M. Baker, B.A., I. C. S., on whose *Notes on Roadside Trees* the special chapter on Sind has been based, and to Major Westropp, R. E., whose instructions for roadside tree-growing have been adopted in the Southern Division and are largely used in this Manual.

7. Further experience will doubtless render necessary considerable revision of this Manual. All officers concerned with such work are requested to forward to the Chief Engineer for Buildings and Roads notes of errors found or improvements suggested. Amendment slips will be issued from time to time ; these should be pasted in their proper place, and a note of them made in the form provided for the purpose.

CHAPTER II.

Administration and Control.

Administrative and financial control.

8. The chief administrative control will rest with the Commissioners of Divisions and the Commissioner in Sind. This control will be exercised through the Superintending Engineer, where the work is carried out by the Public Works Department, and in other cases through the Collector. The financial control will be exercised by the Superintending Engineers where the work is carried out by the Public Works Department and in other cases by the Commissioners.

Technical control.

9. The chief technical control will be exercised by the Senior Conservator of Forests through whom all technical questions which require the orders of Government should be referred. Working plans must be submitted for approval to the Conservators of Circles who will advise officers on technical matters when required.

Executive control.

10. Executive control will be exercised by (1) the District Local Board or (2) the Táluka Local Board or (3) Municipal Committees or (4) the Public Works Department. Arboricultural operations on Provincial roads will be carried out by the Executive Engineer of the district. The Commissioner will decide in each case whether operations on District Local Board roads, maintained by Public Works Department agency, shall be carried out by the Executive Engineer or by the District Local Board, but where the District Local Board retains the arboriculture in its own hands it must be responsible that the operations are so conducted as not to interfere with the repairs of the road. Operations on other roads maintained by the District Local Board or the Táluka Local Board or a Municipal Committee will be carried out by the agency which maintains the road, subject to the approval of the Collector.

11. Where the operations are conducted by the Public Works Department the Executive Engineer will consult the Collector in regard to the choice of the kinds of trees to be used and the preparation of the working plans.

12. Where the operations are conducted by one of the local bodies named, the Collector may, where feasible, make over to some member of the district staff the immediate supervision of the operations of the whole district, but at the same time the responsibility of the Mámlatdár for the work in his táluka should be maintained and encouraged.

13. The working of each of the agencies named will now be discussed separately as far as is practically convenient, but, where the remarks or instructions affect more than one agency, they will be found under that agency with which their connection is most important.

District Local Boards.

Allotments.

14. It will probably be found that the allotments made for arboriculture by the different Boards are very unequal in proportion to their income. It appears desirable that, without insisting on a too rigid uniformity among bodies which are more or less independent, some reasonable approximation to a general standard of allotment should be attained, but the more arid districts would seem bound to make larger appropriations in proportion to their income than those having a heavier rainfall, as, besides the greater difficulty in securing good results, the shade and vegetation obtained are in themselves more precious; and this appears feasible because such districts have generally to spend less on the repairs of their roads. District Officers should use their influence to secure that allotments for arboriculture are proportioned to the needs and do not suffer reduction without due cause.

Nurseries.

15. The foundation of district arboriculture is a sufficient number of well-stocked nurseries. There is a great risk of waste of money in organizing planting operations without a full supply of young plants. Trees are seldom ready to plant out until they are two years old. None should be planted out under 3 feet high. Nurseries should ordinarily be established along roads at every five miles. Experience shows that nurseries are not usually provided in sufficient abundance, and the District Local Boards should take intelligent and provident action in the matter of selecting sites beforehand and providing nurseries so that the young trees, when required for planting, will not have to be brought from a great distance.

16. The establishment of district nurseries has two objects, *viz.*, plantation work and the free distribution of plants. Consideration of these objects will indicate the localities where each kind of nursery should be provided. The nurseries for planting operations should, of course, be near to the projected work and as numerous as circumstances may require. They will often be made on hired land, when they will be given up after the planting operations are completed, or in places where it is intended to provide subsequently a grove or tope for shade for wayfarers. For such nurseries good soil and the existence of a well or other means of watering the plants are the first consideration. The central nurseries from which plants or seed will be distributed either to the plantation nurseries, or to private individuals who

undertake to plant by the roadside, should be located at the head-quarters of tálukás and other suitable centres where responsible supervision is available. These nurseries may also be utilized for the distribution of the better kinds of fruit-trees which may be obtained from the large public gardens. Such nurseries might be managed through the Táluka Local Board or directly through the Mámlatdár.

Plantations.

17. It is probable that, as a general rule, large plantations will not be undertaken by District Boards; but in special cases, where the acquisition of land is easy, or where facilities for irrigation exist, it may be both useful and profitable to put considerable areas under trees, as has been done in the Punjáb. The provision of good supplies of firewood is much to be desired as setting free the manure from cattle for use in the fields. Pieces of land unfit for agriculture can often be had on very cheap terms. Each District Board may consider what it can do with most effect towards the general advancement of tree-growing, and should, where this seems advisable, incorporate such schemes with its general working plan.

Groves.

18. Groves include *topes* on roadsides and encamping-grounds and groups of trees round *dharamshálás*, schools, dispensaries, *thánás* and district and inspection bungalows. The roadside groves, without being of necessity at ten-mile intervals, should be formed at places where travellers usually break their journey and are especially necessary where the soil at the roadside is so barren or rocky that the provision of avenues is impracticable. These groves should be provided as early as possible and, if access is provided from the road, the unyoking of the oxen on the road may be forbidden with much benefit to the road.

Avenues.

19. It will be found that, in most districts, the planting of avenues has been conducted on the sensible plan of working outwards from the head-quarter station. This arrangement probably affords shade to the maximum number of travellers; it serves to indicate the order in which the work should be undertaken and it should be followed in every táluka. But the effectual protection of the young trees already put out is of greater importance than new work, which should never be allowed to extend beyond the limit within which efficient protection can be guaranteed.

Staff.

20. The staff employed will be of two kinds—Supervising and Executive, the former being ordinarily charged as establishment and the latter to "works." The arrangements made in various districts need not be uniform; the main point is to secure what is really necessary and practicable in each particular case. The District Board will decide on the method of

supervision of the roads in its charge. It is recommended that, where the income or expenditure in any district is considerable, a Supervisor should be employed, under the direct orders of the Board, who should be held responsible that all work is taken up at the proper time and that it is properly done. The Supervisor should be active in habit, with sufficient education to enable him to master the working plan of the district and to make ordinary official reports, and he should possess a sound practical knowledge of planting and pruning. It is difficult, if not impossible, to obtain men with the requisite knowledge, and the best plan will probably be to select a fairly young and intelligent candidate, of the right class, who shows some aptitude for the work, and to send him, for three months' training, to a Forest School. It must not be considered that this three months' training will render the man an efficient Supervisor, but he will learn by experience, and some further training may be given subsequently, either in a Forest School or in a public garden, when he may be better fitted to assimilate the teaching. If possible it would be advisable also to arrange for the occasional inspection of his work, at least for some time, by a Forest Officer or a qualified Ranger. When such an appointment has been made, each Táluka Local Board might be expected to give general supervision over the work within its limits and the Chairman might be held responsible that any defects are promptly reported to the District Board. Where no Supervisor has been appointed, the Chairman of the Táluka Local Board should be responsible for the proper and punctual performance of all work provided for in the plan of operations and for the general supervision of all the avenues within his jurisdiction.

21. The Executive staff will consist of the staff employed in the nurseries and the staff employed in planting and maintaining the trees at the roadside. It must be realized that the work of growing trees for avenues is distinct from forestry and agriculture, in both of which natural selection by competition is more or less advantageous and economical. The establishment of trees at the roadside is necessarily a costly operation, and each tree in the nursery, which is intended to be planted at the roadside, must be so carefully tended that the period of maintenance, and the number of casualties, at the roadside shall be reduced to the minimum. The work to be done at the nurseries and on the roadside is not such as can be done by an untrained cooly or cultivator, and it is essential that an ample staff of competent *mális* shall be employed, especially in the nurseries. There should be at least one capable *máli* at each head-quarters nursery. If a sufficient number of competent *mális* cannot be obtained it will be the first duty of this *máli* to select and train coolies or cultivators. Some of these coolies may be found competent later to take charge of the roadside nurseries, but it cannot be too strongly urged that efficiency

and economy in roadside tree-planting is chiefly dependent on the competence of the Executive staff. Good *mális* are not easily obtained and are worth paying well. Certificates are usually of little value and a practical trial is essential. The money needed for obtaining a capable Executive staff and retaining them afterwards should not be grudged.

22. The same trained staff is required for planting the avenues at the roadside and this operation should be considered as part of the work of the nursery. When the trees are planted the work to be done will consist of watering and protecting them. Both must be carefully and systematically done. The *bhistis* or others engaged in watering must be trained by the Supervisor and their work inspected frequently until they can be trusted. It is important that the same person should be responsible both for watering and protecting the trees.

23. The men employed in pruning and lopping must be specially trained. No Indian *máli* has usually any knowledge of the work. If it cannot be done properly it is better that it should not be done at all. The men must be trained by the Supervisor and the work must be done in his presence until the men can be trusted.

24. The importance of employing efficient and capable staff for the sake of economy has been strongly urged, and the same principle applies to the provision of the implements required, such as spuds, hoes, knives, secateurs, hose, watering pots, etc. Money spent in providing the stock required of these will not be wasted if the *mális* are made to use them.

Working plans and maps.

25. Great importance is attached to well considered plans of operations extending over several years as, without them, there can be no sustained progress. The preparation of working plans will be described and a form given later. If possible this form should be worked to but, if this is not practicable, any simple plan will suffice which shows clearly the expenditure necessary, for each portion of work taken in hand, year by year from the time that the nursery is formed to the time that the avenue needs no further protection. For the preparation of the working plan it is very advisable to have a map showing avenues already in existence, with gaps noted, avenues still under protection and the portions of road proposed to be taken in hand. If required the Public Works Department will assist in the preparation of this map.

26. The working plans should be drawn up táluka by táluka. In framing them the assistance of the Forest Officer should when possible be enlisted. When the Commissioner can arrange, in communication with the Conservator of Forests for the deputation of a

Forest Ranger for inspection or for the preparation of a district plan, this course may be freely taken, provided that it involves no extra expenditure from Provincial revenues. And generally Commissioners should understand that Government wish them to see that plans are framed and acted upon as opportunities offer, and that they are at liberty freely to apply to the Conservator of Forests for any advice and assistance which he may be able to afford them. The working plans should be submitted through the Collector and the Conservator of Forests to the Commissioner for approval.

Control books.

27. The control book is intended to be a clear record showing how far the works sanctioned in the plan of operations have been carried out and with what success. For this purpose a book in the form given in Appendix B should be kept in the Local Board office of each táluka, or, where Local Boards do not exist, in the táluka office. The entries showing results of operations should be made by the inspecting officer, whether Commissioner, Conservator, Collector or Divisional Forest Officer. In the column of remarks will be entered the date of each inspection, the observations made, and any noteworthy facts and suggestions which it may be desired to record. Copies of these notes should be sent with the quinquennial arboriculture reports.

Reports and returns.

28. Every five years the Local Board shall prepare a concise report showing the progress made and work done on roads which have been permanently constructed and are being maintained. The report should show for each road the condition of the road in respect to roadside trees in the beginning of the period under report, the progress made in filling gaps, in maintaining recently planted avenues, and in extending avenues to stretches of road not before planted. Maps illustrating the report in this regard should accompany it. Statistics should be given of the trees planted out, the survivals and the losses, the income and the expenditure, and the condition of the nurseries (if these are used), together with all information required to keep Government fully informed of the progress made. These statistics may be entered as far as possible in the forms given in Appendix E at the end of this Manual. They will be submitted to the Collector who will transmit them with remarks to the Commissioner. The Commissioners will consolidate the reports for their divisions and forward them to the Chief Engineer for Buildings and Roads. The Chief Engineer will prepare a consolidated report for the whole Presidency. The first of these reports must be submitted for the financial year 1913-1914 in time to reach the Chief Engineer on or before the 1st July 1914.

Táluka Local Boards.

29. No special remarks are required.

Municipal Committees.

Scope of operation.

30. The above instructions and remarks apply *mutatis mutandis* to all Municipalities the income of which exceeds Rs. 10,000, though the scope of their work is smaller than that of most District Boards. Ornamental gardens and public parks will be more prominent features in their arboriculture; but it is important that their attention should be directed to avenues and nurseries, and there is certainly room in most towns for development in this direction. It is true that the minor towns have frequently but a small margin of income available for arboriculture, and in many Municipalities there may be no need for a working plan, but where circumstances render the provision of roadside trees in Municipal limits a suitable and practicable object the Municipal bodies should be moved to prepare plans in accordance with the foregoing instructions so far as they are applicable. Where arboricultural operations are found possible control books should be kept and the reports and returns submitted as laid down for District Boards.

Village Communities.

31. When a tank is made or repaired from district funds it may be desirable to make a previous stipulation that so many trees shall be planted on or near its sides or that a plot of land shall be made over to the District Committee for the purpose. It may be found that villagers who do not combine to plant common land are willing to make over a portion of it to the District Board, and in such a case the Board might do the planting and share the profits.

Individuals.

32. Individuals may be induced to plant trees either by giving them the ownership of the trees subject to conditions or by suitable rewards. The form of *sanad* with conditions in use in the United Provinces and the scale of rewards in force in the Amritsar District of the Punjáb are given at the end of this Manual as they may be found useful (Appendices G and H).

Public Works Department.

33. The above instructions apply, *mutatis mutandis*, to the work of the Public Works Department. The staff of the Department will be available for supervision, and Executive Engineers will arrange for the training of a sufficient number at the Forest School, or will appoint a Supervisor as recommended for District Boards, whichever may be most suitable for each case. The reports and returns will be submitted through the Collectors to the Superintending Engineers who will consolidate them for their divisions and forward them through the Commissioners to the Chief Engineer for Buildings and Roads.

CHAPTER III.

Working Plans.

34. The orders of Government require that a working plan of operations should be drawn up in consultation with the Conservator and that when a plan has been finally adopted it must be carried out.

General instructions.

35. Plans for five years in advance should be submitted to the Conservator two years before the expiry of the period covered by the existing plan. They should be generally in the form shown in the example given in Appendix A with such modifications as local circumstances may render necessary. Each plan must provide for the maintenance of all avenues on which the trees are not yet established, and the balance of the grant available must be allocated to extending avenues or filling gaps in existing avenues so far as funds for the maintenance of the new work can be assured in future years. The term "established" means that the trees have made such progress that they can be left to themselves, and no longer require irrigation or regular protection.

36. In order to draw up a plan it is necessary to know the annual grant, the cost of maintaining a mile of young avenue, the cost of planting a mile and maintaining it for the first year, and the number of years for which young trees of various kinds require irrigation and protection. The first datum is usually known with certainty : the others must be ascertained from past experience in the district, and no general standards can be laid down.* When these data have been determined, the amount of new planting that can safely be undertaken can be calculated in the manner indicated in Appendix A.

Choice of Roads.

36*a*. The next step is to choose the roads on which the new planting should be done. In this connection the following points require consideration :—

(*a*) The amount of traffic on the road.—As the first object is to provide shade for travellers, it is obvious that those roads should first be planted on which the traffic is greatest and roads used largely by pilgrims should receive special consideration.

(*b*) The suitability of the soil for planting.—Unplanted roads running through fertile loam should have the preference, provided

---

* *Note.*—In ordinary cases a *máli* of average skill can look after about a mile of double avenue in the second year, and about two miles of double avenue in subsequent years, provided he is given help in the hot weather. The amount of help depends on the distance of water, the nature of the soil and numerous other considerations. A mile of double avenue can usually be planted and maintained for the first year for from Rs. 80 to Rs. 150 according to the kind of tree-guards adopted and various other circumstances.

they are sufficiently wide to allow space for the trees without interfering with traffic or putting the trees on the very edge of fields lying along the road. Where there is not room for a line of trees on each side of a road it may be found that one line can be planted : this should be on the south or west side so as to give shade during the hottest part of the day.

As regards planting on roads where the soil is barren, the chapter on Groves should be consulted. It is usually a waste of money to attempt to plant continuous avenues on such soil.

(*c*) Ease of supervision.—The avenues to be planted should be so placed as to facilitate supervision and (as far as possible) inspection by the Chairman of the District Board and his staff. There is no need to have work in progress in all the tálukas of a district at one time. In many cases it is much more convenient to plant in one or two tálukas only.

37. The question whether the money available for new planting should be given to work on unplanted roads or to filling up gaps in existing avenues is often difficult to decide. It is desirable in many ways that an avenue should be continuous, but there is frequently some difficulty in getting single trees to grow in a line with larger trees as the roots of the latter deprive the former of moisture ; or again it may be found that the existence of a gap is due to barrenness of the soil. Further, it usually costs much more to plant and maintain 100 trees spread over several miles of road than the same number at one place : the *máli* has to go further, water is more difficult to get, and neglect is much more probable. When again an avenue is dying, it is a waste of money and effort to fill the gaps as they occur : it is better to wait a few years until the whole or almost the whole can be replanted. On the whole it may be said that where there are roads with heavy traffic and suitable soil still unplanted, it is better to concentrate effort on them than to expend it in filling small gaps in established avenues ; while where no suitable roads are left without avenues the money available should be devoted to filling gaps. The form of Abstract Estimate given in Appendix C will enable the Controlling Authority to see that provision is made where it is most required.

Choice of trees.

38. Having selected the roads to be planted, the next step is to decide what trees are to be planted on them. The considerations which affect this decision are dealt with in Chapter XXIII.

Location of nurseries.

39. The next step is to decide where nurseries shall be located. It is always desirable that a nursery should be as near as possible to the length of road to be

planted, as this reduces the expense of carriage and makes it easier to transport the young trees without injury. On the other hand, it is essential that the nursery should be so situated that it can be frequently inspected, that the soil is good, and that shade and water are available. The question must therefore be decided on a consideration of the circumstances of each case.*

Responsibility for execution of the plan.

40. The plan will then show the length of avenue to be maintained in each year, the lengths to be planted each year, the trees to be planted, and the number of seedlings to be raised in each nursery. The next step is to ensure that it shall be carried out. Where a supervisor has been appointed, he should be given a copy of the plan and held directly responsible for carrying it into effect. Where there is no supervisor, some official must be required by standing order to put up the plan on certain fixed dates before the Chairman or Secretary of the District Board, so that orders may issue in time for stocking the nurseries and preparing for the new planting.

Alterations in plans.

41. It may occasionally be necessary to depart from the sanctioned plan. If the plan has been carefully framed, it will hardly ever be desirable to plant more than has been provided for: and to do so frequently leads to difficulty in maintaining the extra work, which has not been provided for in the plan for future years. But a very unfavourable season may prevent planting from being carried out. Should this happen, or should there be an accidental omission, the plan should be revised so as to provide for a little more planting in the next year, care being taken that money is available for its maintenance. All revisions of plans should be submitted to the Conservator for approval. Similarly, if the District Board finds that it is in a position to increase the annual grant available for arboriculture, a revised plan should be submitted for approval.

Map of avenues.

42. To facilitate the preparation of plans and the supervision of operations, an outline map of the district should be maintained, showing all the roads and the established avenues. New lengths of avenue should not be shown as such on the map till they are established (paragraph 35). A simple plan is to show the avenues when planted in dotted lines on each side of the road, with the date of planting, and to convert the dotted line into a full line as each length of avenue becomes established.

---

* *Note.*—In some places it has been found possible to establish nurseries in the compounds of inspection houses and to place the caretaker in charge. This has worked very well where the caretaker happened to be a careful gardener. As water is always to be had the caretaker has plenty of leisure and the nursery can be inspected by officers using the house. But everything depends on the skill of the caretaker.

CHAPTER IV.

Tools required for arboricultural works.

43. Various English implements are generally recommended in English books on gardening in India. But in tree-growing most of the work is often done by ordinary untrained coolies, who will use nothing but the tools they are accustomed to handle. And very often it will be found that these tools are more suitable for the work to be done by the class of men available than English implements.

44. Of Native tools which are admirably adapted to the purposes for which they are used may be mentioned, besides the usual and well-known agricultural instruments, the "vahaula" or "hoe axe", used for stubbling out roots, &c.; the "kurpa", or "ramba", of universal use by coolies in nearly all gardening operations; and the grass-cutters' "daránti."

45. *Hedge-pruning instruments of English* make are, however, necessary. These are a hedger's bill or bill-hook, shears, and pruning knives.

46. In pruning and thinning the following instruments are required—

Sharp knives.

Indian saws (thick for greenwood), with long and short handles.

Pruning chisels, with long and short handles.

Wooden mallets.

Pruning knives are made with or without a hinge.

47. Pruning saws ought to have very *fine teeth*, and some ought to be provided with handles of various lengths, to reach branches at different heights. The Indian saw differs from the common saw in having the teeth pointed inwards, and is thus used by being drawn towards the operator. This saw is well fitted for removing branches at a distance from the pruner. For large branches saws about 18 inches long are well adapted.

48. The long-handled pruning chisels are used when the pruner cannot otherwise reach the branches, or finds it difficult to remove them with the saw.

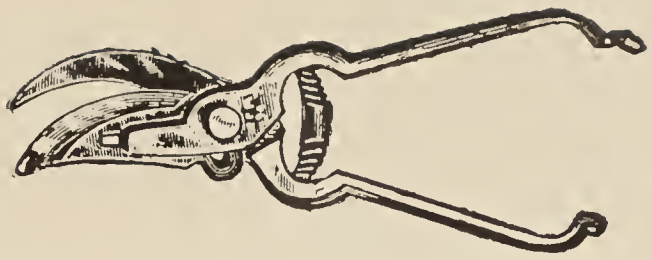

2.—Secateurs, or pruning shears.

1.—A soil "Aerator."

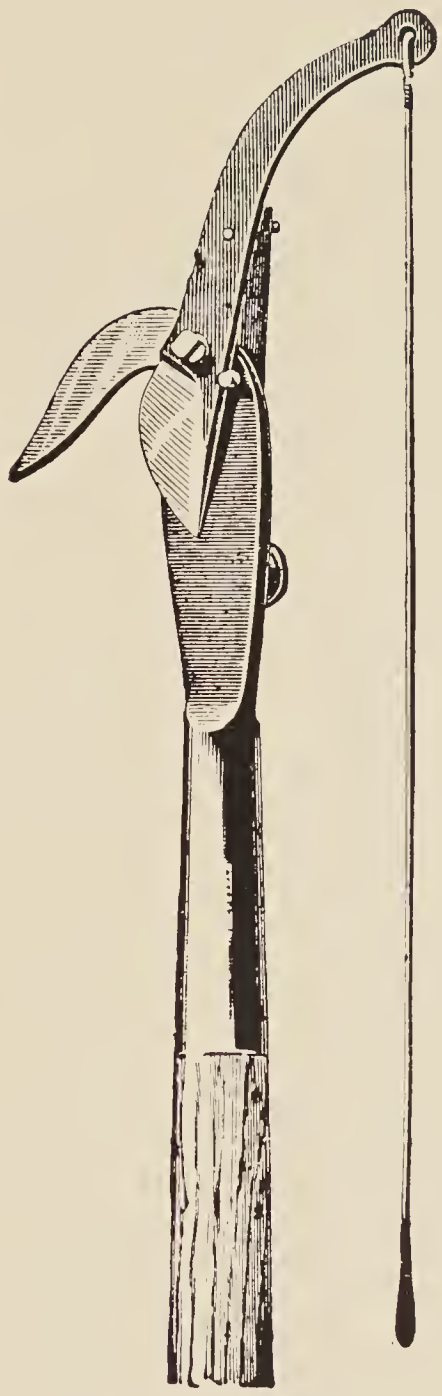

3.—A tree-pruner.

4.—A branch-pruner.

5.—Plucking or pruning hook.

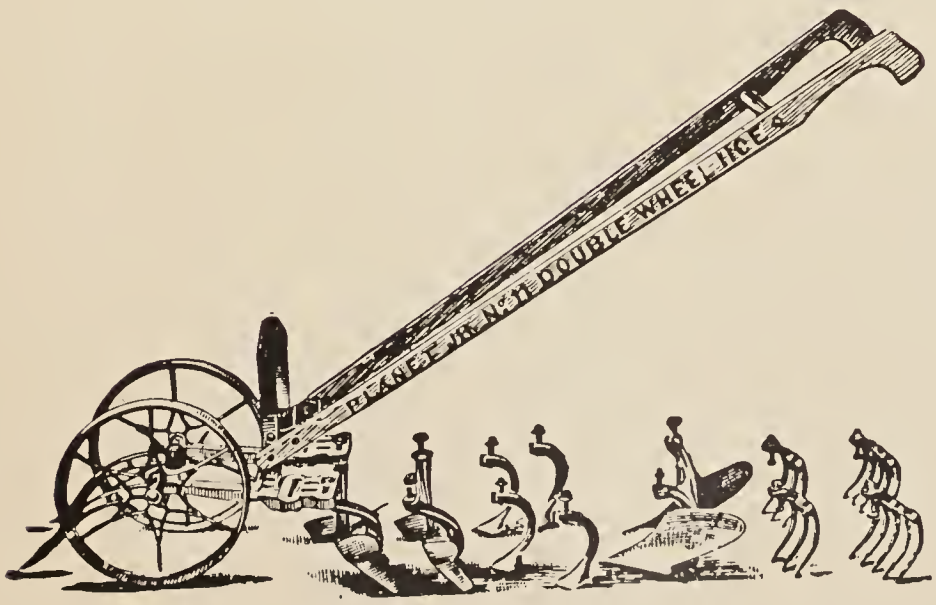

6.—Double wheel hoe.

Arboricultural Tools.

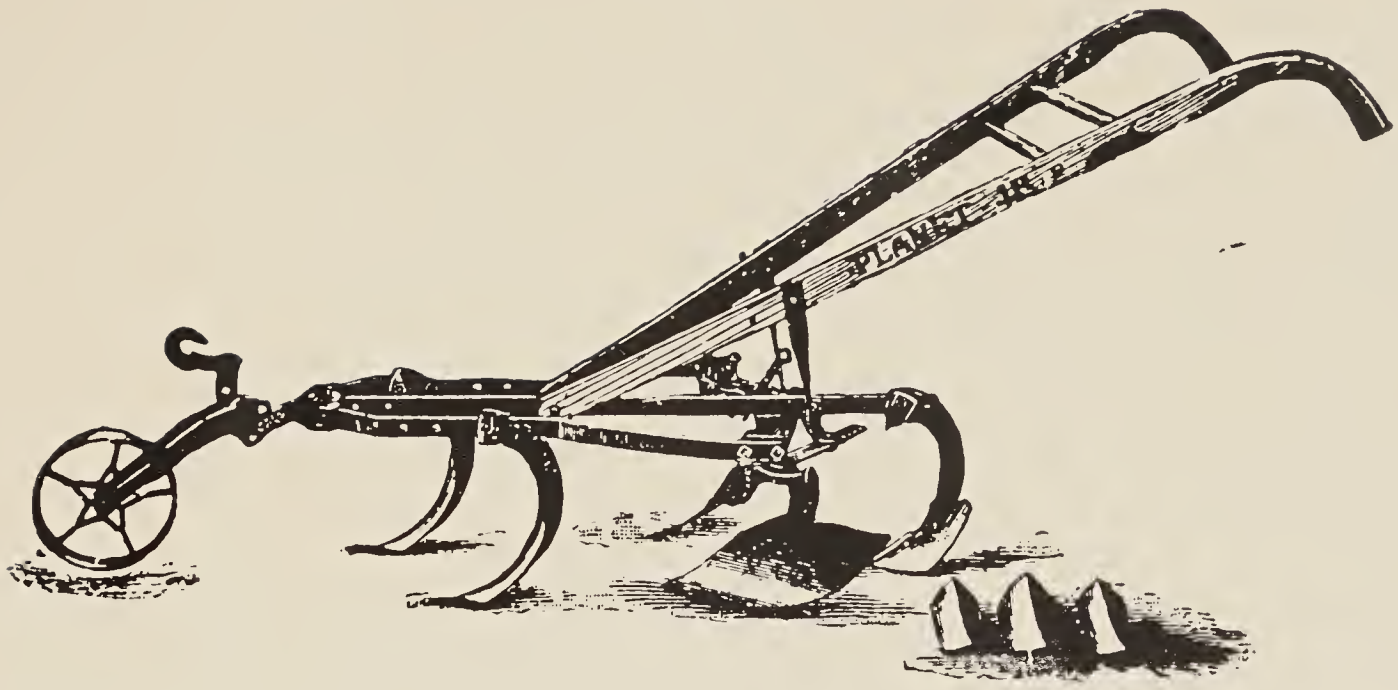

7.—Cultivator.

8.—A useful trio.

9.—Hedge shears.

Arboricultural Tools.

PLATE I. (Completed.)

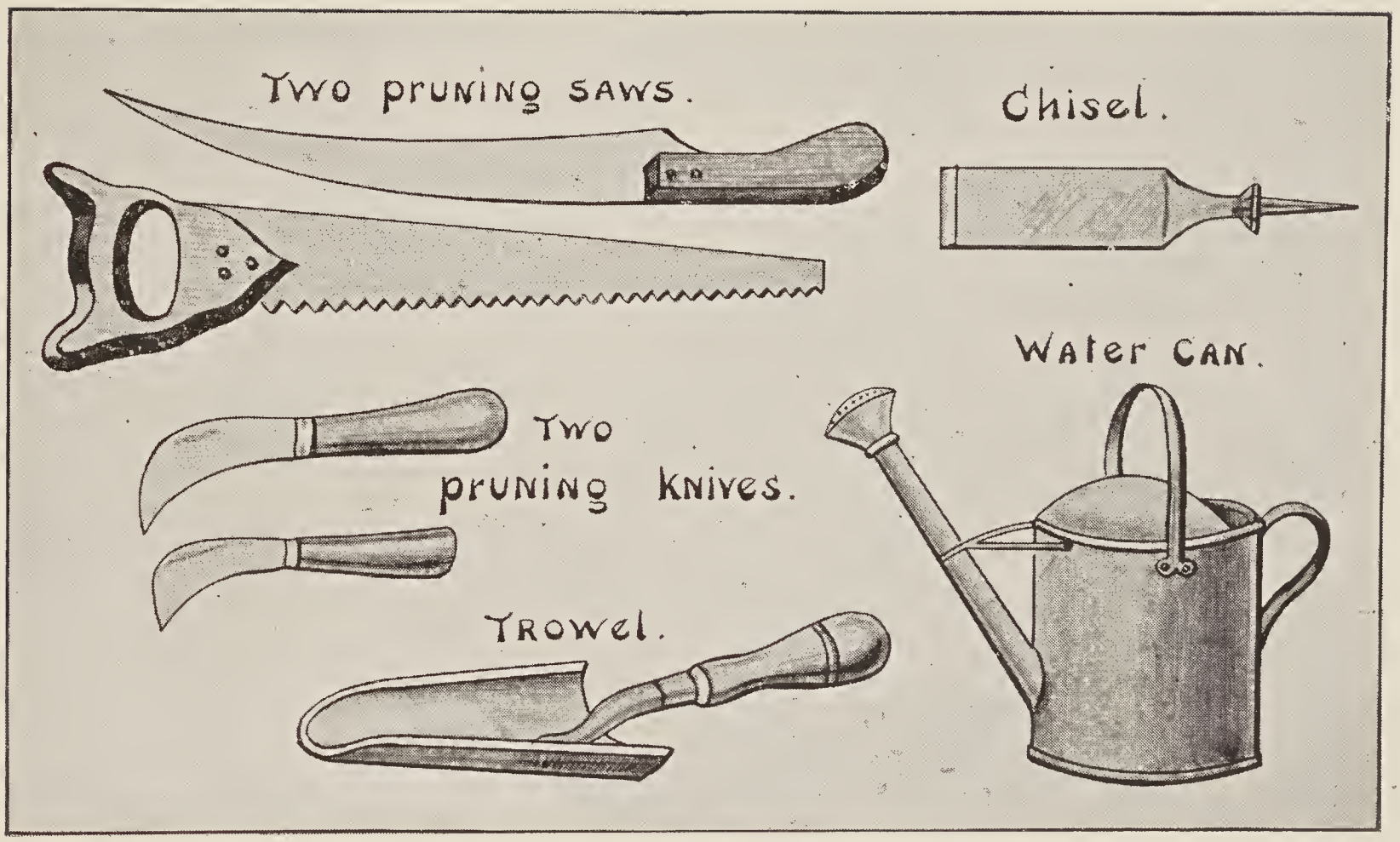

Arboricultural Tools.

CHAPTER V.

Collection and preparation of seed.

49. Trees for planting avenues may be obtained from seed, cuttings, or root suckers. Other forms of propagation, such as layering, grafting, budding and inarching belong to gardening and would rarely be employed and then only in the vicinity of large towns where skilled advice can be obtained.

Collecting seed.

50. It is generally preferable to select for avenues trees which grow naturally in the locality or have become already acclimatised in it, if suitable for the purpose, as it is easy to judge of their adaptability to the soil and climate; and in such case it is better to collect the seed locally as it can then be had fresh and good. But if it is desired to try trees, the seed of which cannot be collected in or near the district, good seed can be obtained at small cost from any of the public gardens, such as the Victoria Gardens in Bombay, the Empress Gardens in Poona, the Lál Bágh Gardens at Bangalore, the Agri-Horticultural Society's Garden at Madras, and the Botanical Gardens at Sibpur (Calcutta), Lahore, Lucknow, Saharanpur, Peradenia (Ceylon), Penang and Singapore.

51. Seeds should not be collected until they are ripe. There are generally signs, characteristic for each kind of tree, by which the ripeness of the seed may be recognised; as a rule sound seeds are moist, of full weight, and of a healthy colour and appearance when fit to gather. The seasons in which the seeds of each kind of tree recommended for cultivation ripen are given as far as possible in the list of trees suitable for roadside planting; but this should be taken only as a general guide as the time of ripening varies in different localities. Many trees shed their seed as soon as it is ripe and, as it is often easier to gather the seed while still on the tree, the progress of the ripening of such trees should be carefully watched so that the seed may be gathered before it is shed. In other cases, such as sissu, babul, etc., the seed remains on the trees for a long time and keeps well, and the same care is not required. The best seed is furnished by healthy mature trees alone and care should be taken that the seed is collected from full grown, well formed and sound trees. The seed should be collected on dry days and, when gathered, should be spread out to dry in the shade.

Clearing seed and preparing it for sowing.

52. In many cases it is necessary to remove the fruit or outer covering of seeds by artificial means before sowing them or preserving them for sowing at a later date. Where the seeds are contained in pods the

pods open naturally when dry and either shed their seed or at most a little threshing or other manipulation will be required. Where the seeds are enclosed in a fleshy covering as in the case of the ber and edible stone-fruits, this covering can be rotted off by burying the fruits in layers in moist earth or sand. Some seeds such as those of the teak have hard coverings, which can only be removed by prolonged treatment in this manner. If the quantity to be dealt with is not large and the saving of time an object, seed of the above description may be prepared for sowing by being soaked in water and frequently stirred for a considerable time, or by being buried in moist manure, where they will get both warmth and moisture, and kept there until they are about to germinate. Seeds of the Ficus species germinate best if sown on the top of a layer of half decomposed cowdung in a shady place.

53. Some seeds germinate better after keeping or after passing through the bodies of birds or fruit eating animals. Babul seed, for instance, gathered from goat yards germinates more freely than fresh seed.

Preservation of seed.

54. The seeds of some kind of trees, such as the mango, neem, jambul, guava and bael and generally most oily or resinous seeds do not retain their germinating power for long and should be sown as soon as possible after being gathered. It is nearly always safest to sow at once all seeds that ripen at seasons suitable for sowing. But some seeds ripen at times not suitable for sowing and the germinating power of some seeds, such as those of the babul and other acacias and some of the cassias, is improved by keeping. Such seeds may be stored in a dry, well ventilated place, where they will not suffer from damp; or in pits excavated in dry raised ground where excess of air and moisture is excluded, and where they can be preserved from the attacks of insects and vermin. One of the best ways is to spread them loosely in layers a few inches thick on a pakka floor as this allows them to be turned over at intervals which should be done especially when the seeds are freshly gathered. As a protection against insects where these are more than usually prevalent it is often useful to mix with the seeds bitter leaves, such as those of the neem or bakain or powerful smelling drugs. Rats, mice, and smaller vermin may be kept off by storing the seeds in gharras or tin-lined boxes, if in small quantities, or in the drawers in an almirah. Seeds can also be well kept and protected from damp by suspending in sacks from the roof of the godown, or in large baskets supported on trestles, and by similar devices.

55. Seed which has been allowed to become damp may suffer from mildew or fermentation. To prevent this it should be carefully dried in the shade before it is stored. This is especially important

where the seed is to be stored in closed receptacles, such as bottles, tins, etc. Seed which is naturally full of moisture or fleshy may be stored for some time, mixed with dry earth or charcoal dust, in a box or gharra but it is preferable to sow such seed at once whenever possible.

Testing seed.

56. As it is a waste of ground, labour and money to sow bad seed, all seed should be tested before sowing whenever there is any doubt of its soundness. A rough practical test may be made by placing some of the seed on an iron plate nearly red hot, when all the sound seeds will burst before burning and the proportion of sound seed can then be judged. A more reliable test, which however takes a longer time, is to sow some of the seed, after counting, in a pot of moist earth, and keep it in a warm and preferably dark place. The number of seeds which germinate can then be counted and this will show the proportion of good seeds.

Quantity of seed required.

57. It is impossible to give any general rules for estimating the quantity of seed required to produce a given number of plants, but it may be said that, as a rule two plants should be raised for each one that is required for planting. Some seeds germinate freely, some the reverse; casualties will occur both before and at the time of planting where required; though the seed is gathered from healthy matured trees alone, the seedlings will vary in health and vitality and all weakly seedlings should be scrapped. As a rule, therefore, a very much larger quantity of seeds should be sown than would apparently be sufficient to give the number of plants required.

58. In arranging for the collection or supply of seeds an ample margin should be provided to allow for failures in germination and for weakly seedlings which have to be rejected; to assist in finding the quantity of seeds required, the number of seeds to the seer is given, where known, for each kind of tree in the list of suitable trees.

CHAPTER VI.

The Nurseries.

General.

59. Although avenues may in some instances be formed by means of direct sowings or by cuttings, set direct *in situ*, it is nearly always more economical and satisfactory to plant out young trees which have been reared in nurseries. In nurseries the seed can be sown in a highly prepared soil; the seed and seedlings can be protected from injury by insects, birds and animals; the seedlings can be shaded from the sun; the watering can be done more economically and with safety and discrimination; and the resulting avenue will be more uniform, because there will be fewer blanks to be filled in year by year and trees of varying ages will be avoided. In nearly all cases therefore the first operation in carrying out a scheme for the formation of avenues will be the selection of the sites for the nurseries that are required to supply the plants.

Selection of site.

60. A good site for a nursery must fulfil several conditions. It must be conveniently situated, both in regard to the areas it is to supply with seedlings and to the exercise of efficient supervision; it must be on good soil and capable of being easily, cheaply and abundantly irrigated. This last consideration is of the first importance in a dry district. Where all these conditions cannot be fulfilled, the least important must be sacrificed. In a dry district, for instance, in order to secure adequate irrigation, it might be justifiable to establish the nursery on inferior soil or at a long distance from some portions of the roads to be planted from it.

Temporary Nurseries.

Nurseries should, as a rule, be made as near as possible to the place where the trees are to be planted. For first operations, such as establishing avenues of trees along new roads, where distances are great and transport difficult, or in the hills where the climate and vegetation vary with the elevation, it will generally be advantageous to make small nurseries capable of supplying the number of plants required along each road or section of road to be planted. Such nurseries are merely temporary tree gardens. But this principle must not be carried too far, as nurseries, if numerous and scattered, cannot always receive sufficient supervision.

Permanent Nurseries.

61. But it is also often desirable to establish permanent nurseries at central places for the continuous supply of the seedlings required in the neighbourhood. As the growing of seedlings of different kinds requires great care, skill and a settled management, and the preparation of the ground is expensive at the outset, it is always best, where seedlings are liable

to be constantly required, as for instance to keep up the avenues of trees round a station, to establish a permanent nursery for this purpose at a conveniently central place. At such central nurseries seeds can be prepared for sowing in the temporary nurseries and in some cases seedlings may conveniently be sent for planting in the same way. The young trees in temporary nurseries must be sown and tended with the same care as in permanent nurseries, but the latter are naturally more carefully laid out, better and more permanently fenced, and are generally larger. The same general rules apply to both kinds of nurseries, and in other respects there should be no difference between them.

Size of Nursery.

62. Before selecting the site it will be well to determine, at least roughly, the size of the nursery required. This depends of course on the work it will have to do, that is, the number and age of the seedlings to be supplied annually. Space must be provided in accordance with the number of years it is intended to keep the young plants in the nursery. For instance, if the seedlings are not to be planted out until they are three years old, space must be provided for a three years' stock of seedlings. Provision must be made for the space required for the roads, which occupy a relatively large area in a well planned nursery, for trenches and paths between the beds, and also for allowing a portion, one-third or one-fourth, of the whole area to lie fallow in rotation every year.

63. The success of the eventual planting will depend chiefly on the young plants being healthy and well grown, and so plenty of space must be allowed. On the other hand, as the cost of clearing and laying out a nursery at the outset is very considerable, it is not advisable to make the area too large. Time given to calculating the size required will therefore be very profitably spent.

64. The calculation of the areas required to fulfil the above conditions can best be made on the form given on the opposite page, which also enables a record to be made of the work to be done. This should always be laid down from the commencement.

Soil.

65. The ground selected for the nursery should, if possible, be of good soil, such as would be chosen for an ordinary garden. Soils on which the common crops of the country grow well will generally be suitable. The thorny vegetation on uncultivated land may give the soil an appearance of poverty, but frequently such soils, if irrigated, will be found to be fairly fertile. Sandy and light soils do very well as cuttings strike and seed germinates best in such soils, but the soil should not be too sandy or it will be difficult to get balls of earth to adhere to the roots of plants when transplanting. Stiff clay soils, though fertile, are not good for tree growing and are especially bad for

Working Scheme for a Permanent Nursery.

Trees to be propagated.	Number.	How to be propagated.	Quantity of cleaned seed required.	Seed when to be sown, or cuttings, etc., when to be set.	Seed how to be sown, or cuttings, etc., how to be set; distance apart, etc.	Area of seed beds required.	Plants how long to remain in seed beds before transplanted.	Plants how to be planted out in nursery lines, etc.	Area of nursery lines required.	Age at which to be planted out.	Total area of nursery lines required.	Area to be left fallow each year.	Area required for roads, etc.	Total area of nursery required.	Remarks.
						Sq. ft.			Sq. ft.		Sq. ft.	Sq. ft.	Sq. ft.	Sq. ft.	
Sissu ...	12,000	Seed ...	2 Seers...	April ...	In drills 1 foot apart.	400	9 Months	In raised trenches 1 foot apart.	12,000	2 Years...	24,400				
Farash ...	6,000	Cuttings.	Do. ...	March ...	6 inches apart in trenches 1 foot apart.	...	...	.....	6,000	4 Months.	6,000				
Kikar ...	10,800	Seed ...	4 Seers...	July ...	In drills 1 foot apart.	300	9 Months	In raised trenches 1 foot apart.	18,000	2 Years...	36,300				
Pipal ...	6,000	Cuttings.	Do. ...	March ...	6 inches apart in trenches 1 foot apart.	...	...	.....	6,000	4 Months.	3,000	24,000	33,000	146,700	For plan *see* accompanying sketch.
Country Mango.	2,000	Seed ...	1 Maund.	July ...	In boxes or pots.	...	9 Months	In raised trenches 1 foot apart.	2,000	3 Years...	6,000				
Ber ..	8,000	Do. ...	30 Seers...	April ...	In trenches 1 foot apart.	8,000	Until planted out.	Not to be transplanted	...	16 Months	8,000				
Plums .	3,000	Cuttings.	Do. ...	March ...	Ditto ...	...	...	.....	3,000	4 Months.	3,000				

Plan of a permanent Nursery.

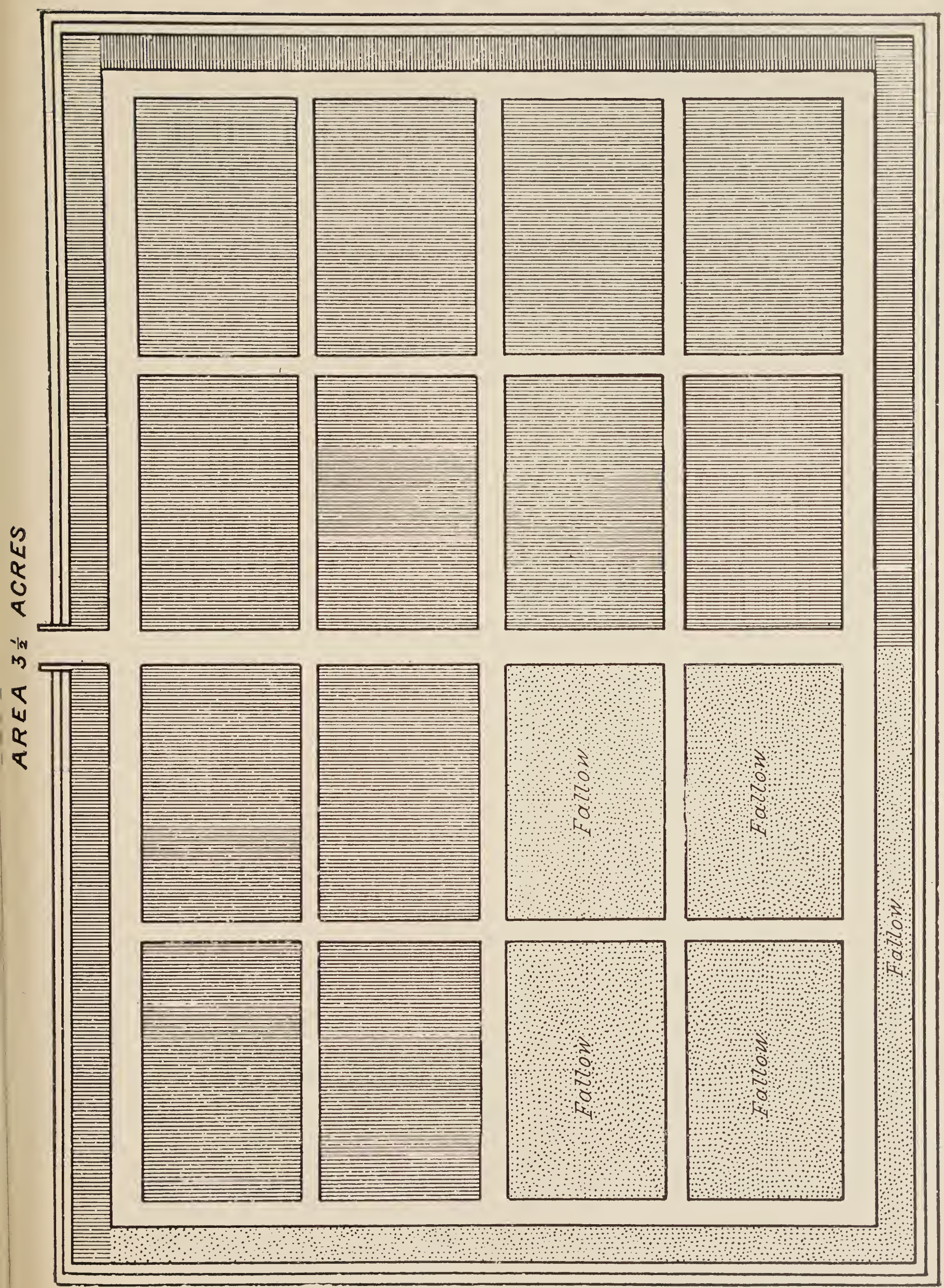

Area statement	Border	16,096 sq. ft.
	Main Road	25,344 ,,
	Central 6 ft. paths	7,824 ,,
	16 plots each 6,000 sq. ft.	96,000 ,,
	Total Area ...	145,264 ,,
	Ditch	5,200 ,,
	Grand Total	150,464

nurseries. Clay soils generally develop deep cracks in the surface during the hot dry weather, they are difficult to work up by digging and the young roots of growing plants cannot easily penetrate them. The nature of the subsoil, provided it is permeable, is not of much importance; but an impermeable subsoil, a kunkar bed, for instance, should be avoided.

Laying out the Nursery.

66. The site being settled, the next thing will be to clear the ground, fence, manure, work up and lay out the ground for work, and make the requisite water channels. In all cases a nursery should be regular in shape, and rectangular if possible. This facilitates laying out the beds and trenches and calculating the areas to be sown, etc.

67. In preparing the ground all stumps and roots of trees and large stones should be removed, the surface made fairly level and the whole ground well and deeply cultivated (at least one foot) so as to give the seedlings a thoroughly permeable soil in which to develop their roots. This cultivation should be commenced after the rains and repeated several times before the sowing season. Moderately deep cultivation is sufficient, as for transplanting it is better that the roots should develop near the surface.

Manuring the soil.

68. In preparing the soil of a nursery for the first time it will generally be necessary, to improve it by adding leaf mould or prepared soil according to its requirements. Stiff clay soil will be improved by the addition of sand or silt from a canal or of charcoal or brick-dust. Sandy soils will be improved by the addition of fine clay or silt from the bottom of a tank or stagnant pool. Lime may be added with advantage to broken up grass land; both stiff clays and loose sands are improved by lime, but it must be used in small quantities and as old as possible. The best general addition to the nursery soil is however vegetable mould obtained from leaves and weeds which have been well decayed. Such mould should be prepared in every nursery, in pits two or three feet deep, situated in a shady place. One or more of these pits should be filled from time to time with leaves, weeds, etc. which should be kept damp by occasional slight waterings and so allowed to decay slowly until ready for being mixed with the soil of the seed beds. No other manure should be used for young seedlings.

69. After the nursery has been some time in use and crops of seedlings have been removed, the soil will become exhausted unless its fertility is maintained by the addition of some strong manure. The manure which can be most easily procured is cow or sheep manure obtained by rotting the droppings of the animals in pits similar to those used for preparing leaf mould. This manure should never be used fresh but should be very thoroughly rotted as otherwise the

grubs contained in it will attack the roots of plants. If possible it should be at least two years old. From 300 to 400 maunds of such manure should be used per acre.

Laying out the nursery beds.

70. The ground must then be formed into beds for sowing. The paths or trenches between the beds should be from nine inches to one foot deep. The beds ought not to be more than three feet broad, so that the coolies can reach half way across them from either side when weeding. But it will frequently be better to sow on parallel ridges. Seedlings will grow with greater repidity on ridges than in beds and will be more easily transplanted. The roads and paths should be laid out so as to meet local requirements and should divide the nursery into more or less equal rectangular divisions.

Staff.

71. There must be at least one competent mali in every nursery and more if the size of the nursery requires it. Coolies will be employed under the mali for sowing, watering and transplanting. These coolies must be trained, as the success of the planting operations depends on skilled transplanting and on regulating the distribution of water in accordance with the needs of the plants. A sufficient number of trained coolies must be maintained to ensure that the watering and transplanting shall be done with care, and when trained their services should not be lightly dispensed with. It would be advisable, if practicable, to shift the trained coolies to other nurseries in preference to dismissing them or employing them on other work.

PLATE III.

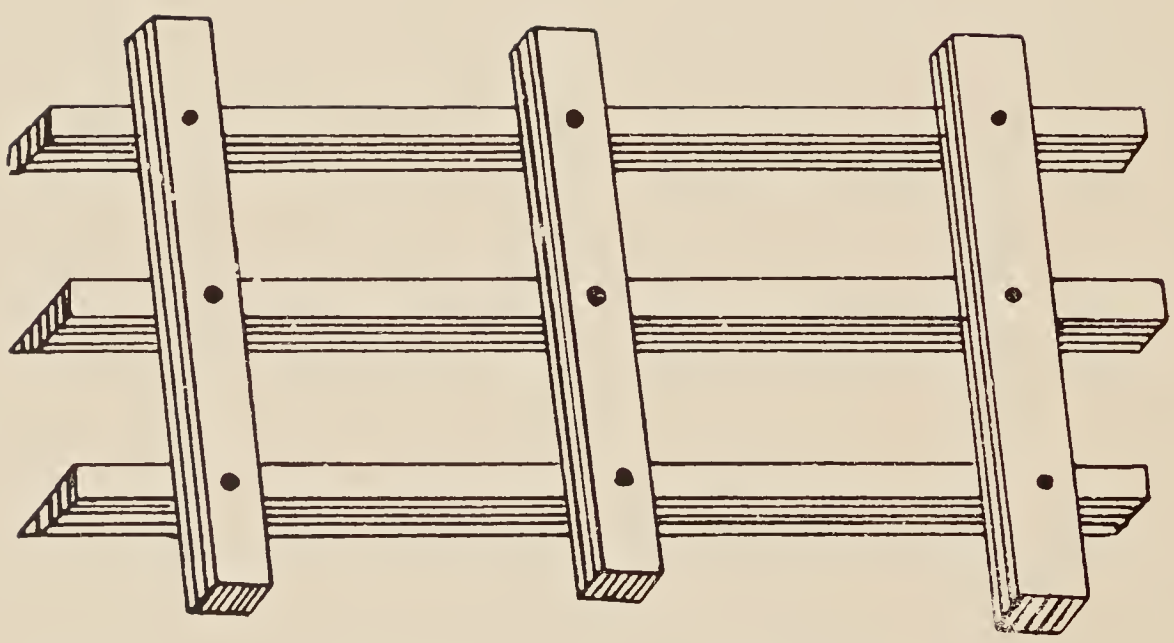

Sowing board.

CHAPTER VII.

Raising Seedlings in the Nursery.

Preparation of the beds before sowing.

72. The general preparation of the seed-beds has been dealt with under the preparation of the nurseries. But before the seed is sown, the soil of the beds should be worked up very finely with the hand, raked level and smooth, and then slightly pressed down, so that the seeds may not be exposed by the washing away of the soil at the time of watering or in heavy rain. The ground should be moderately moist, but not sufficiently wet to stick readily to the fingers when handled. Some seeds will not succeed unless sown in very carefully prepared beds, in which the soil has been mixed with charcoal or brick dust. Some require special protection against vermin and must therefore be sown in cases covered with wire gauze, etc. But, as the cultivation of such delicate seedlings without the aid of a skilled horticulturist is not recommended, it is unnecessary to describe these special methods here. It should be noted that seed-beds should not be placed under trees with dense shade, or under any kind of trees when they will be occupied by seedlings in the rains.

Sowing the seed.

73. The seed may be sown either broadcast or in parallel drills or furrows. Sowing in drills or furrows is best as less seed is required and the seedlings are more easily kept free from weeds and more readily transplanted. The distance between the drills may be from six inches to 1 foot to allow of access for weeding and watering. The distance apart of the seeds in the drill will depend on the size of the seed. Large seeds are usually put in, one by one, by hand. Small seeds can more easily be poured into the drills from a bottle or horn or paper, but they must be evenly and thinly strewn. With very fine seeds it will be necessary to mix finely sifted dry sand for this purpose in order that they may not be too close to each other in the drill. As regards the thickness of the covering of soil over the seeds the usual rule is that seeds should be buried to a depth equal to their thickness and they should not as a rule be covered by more than twice this depth of earth. For making the drills a good plan is to have strips of wood of the required depth nailed, at the distances apart which is desired between the drills, to cross pieces of wood. This sowing board (*vide* sketch on the opposite page) is pressed into the bed and makes the drills of the proper depth. Before sowing a little fine mould should be strewn along the bottom of the drills; and when the seed has been sown earth or better if available fine leaf mould should be filled in over the seed to the proper depth.

Season for sowing.

74. As a general rule, the early spring, just before the leaves appear, is the best season for sowing in the plains where the ground must be irrigated. Where the rainfall is more abundant, the commencement of the rainy season is the best time to sow. But some kind of seeds, as already noted, must be sown at once whenever they ripen.

Treatment of seeds after sowing. Watering.

75. It will be necessary to keep the seed-beds evenly and moderately damp, not dry one day and soaked the next, but moist from the time of sowing until the seed-beds are transplanted. This can be done by irrigation between the drills or by overhead watering. In the case of irrigation care must be taken not to give more water than is required. In the case of overhead watering a fine rose must be used and the watering must be done in the afternoon when the sun is low. In the cold weather little watering will be required and the intervals between waterings may be considerable, but the soil round the seeds must never be allowed to become dry.

Noxious animals and vermin.

76. The freshly sown seeds and the young seedlings as they appear are sought after by a horde of enemies and measures must be taken for their protection. Birds and monkeys can best be kept away by watchers, but it is also useful to spread thorny branches over the seed-beds. Rats, mice and moles may be trapped or the first two poisoned by grains of wheat prepared with strychnine. Hares and porcupines are more difficult to deal with but can be kept down by trapping or shooting. Various chemical preparations have been devised for keeping off insects; a few simple fomulae are given in Appendix I. Wood ashes sprinkled over the beds have sometimes a good effect. Grubs which gnaw the roots must be picked out one by one, but see remarks on the preparation of nurseries. White ants are often very destructive, but the drenching of the soil by irrigation keeps them away. The best possible precaution with hardy kinds of trees is, however, to sow good fresh seed properly prepared, at the proper season when it will germinate quickly, in larger quantities than are expected to be required, and in well prepared beds, where the young plants will be vigorous and grow fast. A sufficient number of seedlings will generally then survive all injuries.

Shading the seed-beds.

77. It will generally be necessary to shade the seed-beds from the midday sun. Moveable screens of grass, reed, or bamboo matting are the best and can be readily put up and taken down as they are only required during the hottest part of the day or at night when pests may be expected, but a light covering of branches along the lines of seedlings will sometimes serve the purpose. Very frequently seeds are believed not to have

germinated, when they have in reality done so, but the young plants have been burnt up by the sun as fast as they appeared above ground, and so no results were visible.

Weeding the seed-beds.

78. Every endeavour should be made to keep the plants in the nursery as vigorous and healthy as possible as on this chiefly depends their chance of success when planted out. It will therefore be necessary to keep the seed-beds free from weeds which would compete with the seedlings for the nourishment in the soil or would deprive them of light and air. The time when weeding is most required is from April to September and, in irrigated ground, the hot weather months, since weeds grow extremely fast in the hot weather. It may be necessary to weed the beds many times in the year, but the work must be done efficiently and without delay whenever necessary.

Aerating the seed-beds.

79. The surface of the seed-bed must never be allowed to cake since some seedlings, when germinating, cannot easily force their way through the soil. But if the directions already given are carefully followed, *viz.*, use of light soil, careful watering and properly prepared seed, this caking of the soil should not happen before the seed-lings are up. Afterwards the surface should occasionally be worked up with a smaller fork or rake, or hoe, at times when the soil is not wet, and this has the advantage of reducing the evaporation of moisture from the soil and giving air to the roots. When the leaves of young seedlings assume a pale sickly colour and the bark contracts or becomes hide-bound, hoeing as above may permit the formation of new shoots and save the plants, but with good management this ill condition of the plants should not occur.

Thinning out the seedlings.

80. It has been stated that competition between weeds and the young seedlings should not be permitted. So also undue competition between the seedlings themselves must be prevented. When the seedlings are too thick in a bed they must be thinned out as they grow so as to give room for development to those that are left. In conducting thinnings the weakly seedlings should first be removed and, as a rule, thrown away. If the plants are still too thick some of the stronger seedlings must also be taken out. The young plants to be left should have good stems, clear bark and fine leading shoots. The healthy seedlings which have been removed in the thinning may be transplanted to other beds. Such small seedlings can be easily and safely transplanted by a competent mali without checking their growth. In thinning out seedlings a uniformly equal distance between the plants is not necessary. The space between them will depend upon the size of the plants and the length of time that will elapse before another thinning is to be made or before the final transplantation of the plants is to take place.

CHAPTER VIII.

Raising Seedlings and Cuttings in Pots and Baskets.

81. Sometimes seeds are raised and cuttings are struck in pots, baskets and boxes. This method of raising plants is a favourite one with gardeners. It is a very good way of raising delicate seedlings or those of which the seed germinates with difficulty or is much preyed on by birds or vermin. Also cuttings of some plants, which are difficult to strike, may be made to strike more easily by setting them round the edge, and touching the sides of pots. But for such work greater care and skill is required than in raising plants in the ground, and it is not advisable to attempt it unless a trained mali is available to supervise the work.

82. Pots and baskets may be used with advantage for growing and transporting plants which are required to be planted at considerable distances from the nursery. The advantages of this practice are the facility with which the young trees can be planted where required without injuring the roots, the economy in transport where competent malis can be sent to do the re-potting when required and the possibility of planting at almost any season of the year. The disadvantages are the cost of the pots and baskets and the difficulty of keeping, without injury to the roots, the young trees in pots or baskets until they reach the size which is desirable for roadside planting.

Growing trees in pots.

83. In the pot culture of trees the following method should be followed as nearly as possible. The pots should be well drained by placing a piece of broken pot over the hole at the bottom and the pot should be filled with similar sherds or crocks for an inch or two from the bottom to assist the drainage. These should again be covered with moss, cocoanut fibre or leaves to prevent the soil from choking the drainage material. As soon as the seedlings are large enough to handle easily they should be put singly into pots. When the roots reach the sides of the pot, the plants should be shifted into a larger pot 6″ to 8″ in diameter. If not then large enough to be planted out, they must be again re-potted into larger pots ; or one or more of the shifts may be carried out in the ground in a nursery and the subsequent or final shifts be made into pots. As will be pointed out later, in dealing with planting at the roadside, it is very desirable that the young trees should be of such a size as to be safe from damage by goats and other browsing animals. When a plant is kept too long in a pot the roots form a dense mat round the sides of the pot and these roots are useless for the growth of a tree and should be cut away. Therefore when it is impossible to grow trees in pots to the size indicated, without this matting of the roots, the chief advantage of the system, viz., ease

in planting, is lost and it becomes a question whether it is not more economical after all to incur greater cost in growing and transport in order to avoid the expensive measures necessary for protecting small plants when put out by the roadside.

84. Where pots are used it is best to use those of the right pattern which narrows from the top towards the bottom, as it is easy to turn out the plant from such a pot without breaking the ball of earth. If pots of any other pattern are used they must be broken to remove the plant and this adds to the expense since they cannot be used again. Sometimes chatties are used, but this is not recommended as it is impossible to re-pot into larger pots as the plants grow. If pots are used it is essential that they should be perfectly clean. Before being used a second time they should be thoroughly washed both inside and out.

Growing plants in baskets.

85. Pots are costly, heavy and expensive to transport, and where light and cheap baskets can be obtained they form a very efficient substitute for growing seedlings or rooted cuttings. They have a great advantage over pot in that the drainage cannot be stopped and it is therefore impossible to over-water the plants. If the right baskets, *i. e.*, thin bamboo baskets, are obtained it is not necessary to turn out the plant when potting on as the plant and basket may be planted in a larger basket. The soil in baskets is better aerated than it is in pots. Baskets must however always be kept off the ground as otherwise they rot through very quickly. This method of growing plants has been successfully used at Belgaum by Major Westropp, R. E., and these notes have been supplied by him.

Soil in pots and baskets.

86. It is very important that the soil used for growing plants in pots and baskets should be good, as the plants have so little soil to grow in. Leaf mould made from well rotted leaves mixed with an equal quantity of well rotted manure, if possible two years' old, makes an excellent potting soil. It is a good plan to spread the manure out in a thin layer in the sun for some time before use, in order to get rid of the grubs which eat the roots. For this reason stable manure is better than cow manure.

Watering plants in pots.

87. Watering plants in pots is almost invariably performed by natives in an imperfect manner if left to themselves; thus a small quantity of water is given frequently but seldom enough to wet the whole of the earth in the pot. Water should be given as often as the earth gets dry and before the plant begins to droop and at each application sufficient should be given to go through and run out of the bottom. The men entrusted with the watering should be carefully instructed and watched.

CHAPTER IX.

Raising trees from cuttings in Nurseries.

88. Cuttings of some kinds of trees strike readily and form sound trees and, when such is the case, this method of propagation is the best, quickest and most economical to adopt. It is also frequently the only practical method by which a number of trees bearing good fruit or flowers can be raised. Cuttings taken from the upper shoots generally produce flowers and fruit sooner, while those taken from nearer the roots, as a rule, strike more readily. The best time for taking cuttings is before the tree puts forth its spring shoots, or in the case of some trees, such as the Indian figs, at the commencement of the rains.

Theory of striking cuttings.

89. A brief description of the theory of striking cuttings will assist in realising the necessity for the precautions recommended. The cambium layer of the cutting contains the nutriment required for its support and for the formation of roots. The roots are formed from the edge of the cambium layer below ground but will not form unless this edge is clean, unbruised and healthy. Any rot at this point will stop the formation of roots. Excessive moisture or the presence of decaying material in the soil causes rot to set up in the cutting. Cuttings of soft wood in full growth sometimes contain moisture sufficient of itself to set up rot and, for this reason, gardeners often allow such cuttings to wilt or dry for a few hours before setting. The cambium layer must always be prevented from drying, for, when dry, the nutriment is not available for the formation of the roots. The chief causes of evaporation are sun, wind and dry air, and their effect may be lessened, when necessary by providing shade and shelter and by watering the ground surrounding the cutting bed. It is unlikely that the part of the cutting below ground will become too dry but evaporation may be expected from the portion of the cutting above ground and must be prevented as far as possible. As the growth of the root buds at the base of the cambium layer is assisted by intimate contact with the soil and any movement in the base of the cutting is prejudicial to its growth, firm planting in the soil is essential but the cutting must not be pushed into the soil for that would injure the base of the cambium layer.

The cutting.

90. Sound healthy branch wood must be chosen for cuttings, and for roadside trees it is usually better to select well ripened wood about a year old. It is absolutely necessary for success that the cutting should possess two uninjured buds, one below ground and one above. The length of the cutting below ground should be that required to keep the cutting firm

and need be no more. There should usually be 3 or 4 eyes or buds below the surface of the soil and all leaves on the cutting which will come below this surface should be cut off before planting. The length of the cutting above ground need not be more than will give 3 eyes or buds above ground. The objections to having a great length of cutting above ground are that they are then more difficult to keep steady and the evaporation from the surface is so great that it is difficult to regulate the supply of moisture in the soil so as to supply the loss without causing rot. Some cuttings, however, such as those of the different species of Ficus strike so readily that this regulation of the length of the cutting above ground is not of importance. The end of the cutting below ground should be cut across with a clean cut made with a sharp knife just below a bud. Some gardeners recommend that this cut shall be slanting. This has the advantage that there is a greater area of the edge of the cambium layer exposed and therefore a greater chance of the formation of roots; on the other hand a few good roots are better than a larger number of weaker roots, and it is more difficult to ground firmly a cutting, with a sloping base, without bruising the bark and cambium layer.

Soil.

91. It has been said that the great enemy to the rooting of cuttings is rot and that this is caused by excessive moisture and the presence of rotting material in the soil. For this reason leaf mould and manure should be avoided. Burnt earth or pounded brick dust, clean river sand and powdered charcoal are good materials, the last named having considerable effect in preventing rot. When the roots are formed there should be a supply of nutriment available for them. Thus leaf mould and garden soil may be placed in the beds or in trenches a short distance below the base of the cutting.

Setting the cuttings.

92. The cuttings should be set firmly on the brick dust or sand which may preferably contain a proportion of powdered charcoal, and the same material must be firmly pressed or rammed round them. Some gardeners recommend that they shall be set slanting and this is a very common practice among Indian mális. The only advantage gained by this is that the soil is thus more firmly pressed round the base of the cutting in careless planting. The soil or material in which the cuttings are set should be just damp and no more. It is a good practice to put a little damp mud on the top of the cutting to prevent evaporation from the exposed surface of the cambium layer.

Watering.

93. The principle in watering should, as said above, be to keep the soil just damp and no more. There is no objection to the tops of the cuttings being wetted as, if they are properly sheltered from sun and wind, this will prevent

too great evaporation. There is no object in heavy watering until the roots are formed and able to take up the water to supply the growth of the plant.

Care of cuttings.

94. Beyond careful watering nothing more is required than to keep down weeds, to keep the surface of the soil open and to shelter from sun and wind so as to check evaporation. An excessive supply of moisture in the ground will cause the top growth to commence before the roots are formed and the cambium layer will then be depleted of its stock of nutriment and the cutting will die. When top growth has started after the formation of roots the treatment of the young plants should be the same as that recommended for seedlings, but the cuttings should not be transplanted until the top growth is firm.

CHAPTER X.

Reproduction by Root-Suckers.

95. The method of digging up the root-suckers, or shoots which spring up from the roots, is not commonly used by natives of this country except in the case of plantain trees. It is, however, the only way of propagating some beautiful exotic trees common in gardens, such as the Millingtonia Hortensis of which the seed is not fertile in this country.

Best way of obtaining suckers.

96. Suckers may be dug up and cut away, without harm to the tree, from any tree which sends them up, but, the best way to get them is to cut down an old but healthy tree, carefully fence it in, and water the ground round its stump. This promotes the production of suckers. The suckers generally take two years or more to grow to a size fit for planting out. At the planting season, the young suckers should be carefully dug up and cut from the old roots with a sharp axe, a sufficiency of root being left to them. They can then be planted out in pits in the same way as seedling trees from the nursery are planted. They require a good deal of watering at first. Cuttings from the roots of trees that have the power to throw out root-suckers may also be used for propagation. Clean cut pieces, up to a foot long, of the roots are buried obliquely in the soil with their upper ends just below the surface. The soil should be well worked up and kept moist. This method is used for producing hedges, etc.

Propagation of *date-palms* and *bamboo.*

97. Date-palms and bamboos are best propagated by "*shoots,*" which, though not true suckers, are often so called, and are best obtained and treated in the same way as true suckers. The reasons for using this method with these two plants are that the seed of bamboos is very difficult to obtain, as that plant does not seed every year, and, when it does, many years elapse before the shoots attain their full size from seed. Transplanted bamboo roots, however, if successful, will send out full-sized shoots in two or three years. As to the date-palm, it is easily raised from seed, but does not, as gardeners say, "come true"; that is, the fruit of the seedling may be much inferior to that of the parent tree. The fruit of trees grown from date-suckers, however, is the same in quality as that of the parent trees.

Coppicing.

Coppicing and Pollarding.

98. The method of "coppicing" or growing "shoots from tree-stumps" is also a way of reproducing trees. "*Coppice*" means a wood or tree which has been cut down and the shoots from the stumps allowed

to grow. Nearly all broad-leaved trees will, if cut down when not too old, throw out "*shoots*" from their stumps; and by cutting off the stump, or "*stool*," close to the ground, such shoots will take root separately and have an independent existence. All coppice-fellings should be made either during the cold weather, or just at its close before the new leaves come out. Pines and cedars (deodar) and similar trees do not throw out coppice-shoots.

99. Coppicing should not be confused with *pollarding*, which consists in cutting off the stem of a tree at a height of six feet or more above the ground instead of at ground level. If healthy, most broad-leaved trees will, if cut in this manner, send out shoots much more numerous than those of a coppiced tree, but smaller and mostly growing outwards, not upright as in the case of coppice. These shoots are never more than new branches of the original tree, while those of a coppiced tree, when cut level with the ground, themselves become trees. Pollarding is sometimes useful in order to furnish an annual or biennial supply of fodder or small branches for fuel, but trees are in no sense *reproduced by* this operation.

CHAPTER XI.

Treatment of young trees in the Nursery.

General.

100. When the seedlings are removed from the seed beds, they may either be grown on in the ground of the nursery until they are of sufficient size to be planted by the roadside, or be grown on in pots and transferred in them to their final positions. Though the latter method has advantages in special conditions, the former is that usually employed and will be dealt with first. In order to understand the factors on which success depends in transplanting, either in the nursery or by the roadside, it is necessary to have some knowledge of the method of growth of a plant or tree.

101. The function of the roots is to take up from the soil water and certain mineral substances dissolved in water which are required for the growth of the plant. This function is performed by the fine hair-like rootlets near the growing point of the root, and is assisted by aeration of the soil. The growing point of the root is protected by a scale. When this scale is removed growth of the root from that point is stopped. Further root growth is then made from adventitious buds which form on the larger roots and with greater facility nearer the stem. These adventitious buds form with great difficulty, if at all, when the roots have been allowed to become at all dry and their formation is assisted by intimate contact with the soil.

102. The living parts of the tree above ground are the pith, the cambium layer or layer of wood immediately inside the bark, and the leaves. The function of the leaves is to manufacture tissue for building and maintaining the tree. In addition to the material sent up by the roots, carbon is taken from the air and oxygen and water are evaporated. For this work light is necessary. Water is by far the largest constituent of the tissue of leaves, and if it is evaporated at a faster rate than that at which it is supplied by the roots the leaves wither and drop. This evaporation is accelerated by sun and wind and is retarded by rain and artificial moistening. The sun shining on wet leaves burns and may kill them.

103. The cambium layer forms the means by which the tissue or sap is transported to the part of the tree where it is required, and contains a reserve of such tissue. It must retain its moisture if its proper functions are to be performed. The function of the bark is to protect this cambium layer both from damage and from loss of moisture.

104. There is thus a balance between the different parts of a tree. If the root system is damaged, as in transplanting sufficient moisture is not supplied to the leaves and cambium layer, to make up for the loss by evaporation from the leaves and branches, and, unless

these are reduced in the same proportion, the result will be the loss of the whole or a part of the tree. Therefore, in transplanting trees, the top and the leaves should be reduced in proportion to the reduction of the roots; every endeavour should be made to retard evaporation during transfer and until the roots are working; and the season chosen should, as far as possible, be that at which evaporation is naturally at the minimum.

105. Again, in transplanting, precautions should be taken to prevent the roots from drying during transference. It is difficult even with plants in pots, and with the greatest care in handling, to avoid damage to the growing points of the roots when repotting or planting out, and in road work, with plants taken from the ground, this is altogether impossible. The aim should therefore be to prevent, by frequent transplanting in the nursery, the formation of long and useless roots and to foster the formation of strong roots near the stem. All broken and damaged roots should be cut off with a clean sharp knife. The soil within about six inches of the stem should be brought into intimate contact with the strong roots by watering and puddling, using a rammer if necessary. The growing roots require air and the soil beyond this radius of six inches should therefore be fairly loose.

Transplanting seedlings in the Nursery.

106. When dealing with the raising of seedlings in the nursery it was pointed out that it is necessary to prevent undue competition among the seedlings and that, after removing and destroying the weakly seedlings it may be necessary to transplant some of the healthy seedlings to other beds. Where large sized seedlings are required for planting out, as for road avenues, it will be necessary later to transplant all the seedlings from the seed beds to other beds in which they will be at a greater distance apart, so as to reduce the competition for light, air and nutriment, and thus enable them to develop strong manageable roots and grow to the size that is required. The plants should be lifted from the seed beds as soon as they are of a convenient size to handle and the roots if injured in transplanting should be pruned with a sharp knife. If a long tap root forms it should be shortened, except in the case of pines and firs. The older the seedling the more care is required in the operations of lifting and transplanting. The seedlings must not be pulled but must be lifted carefully with soil attached to the roots if possible. A cheap and expeditious way of lifting plants from the seed beds, where the seed has been sown in drills, is to dig a trench parallel to and at a short distance from each line of seedlings. The plants can then be pushed into the trenches helped by the spade or trowel from behind.

107. Seedlings should be replanted as soon as possible after being lifted; otherwise they, and especially the finer roots which are of the utmost importance in the life of small plants, may become dry.

Where immediate planting is not possible, the roots should be protected by damp grass, or light soil thrown over them as they lie. Dipping the roots in mud, as is often done, is not advisable in the nursery as the finer roots suffer in the process. When taken out of the beds the seedlings should not be thrown together in heaps, but each plant should be neatly laid roots down against the side of a trench until removed. The work of lifting, removing to the transplanting beds and placing on the ground should be done in an orderly and systematic manner, and no more seedlings should be lifted than can be planted within a reasonable time. After transplanting the seedlings must be shaded from sun and wind until the roots are again working.

Planting out in the nursery lines.

108. The seedlings may be replanted in trenches dug in the transplanting beds, or, if they are large, in pits. If the foregoing directions have been carefully followed no trimming other than the removal of broken roots, referred to above, will be required. If there are long roots these should be curtailed and dead or dying twigs cut off. Good soil or leaf mould should be strewn over the bottom of the trenches or pits. Little need be said about the actual planting in the nursery as it will practically always be possible to lift with a ball of earth and without much damage to the fine roots. It will then only be necessary to firm the earth filled in round them. There are, however, a few points needing attention. If there is any damage to the finer roots in transplanting, the tops must be cut back proportionately and in this cutting back the instructions given under "Pruning" should be followed. The plants should be shaded from the sun until the roots are working properly. The plants should be set with the soil at the same level on the stem, and the level at which the plant is set should be such that the irrigation water will not reach the stem above the ground.

109. If the soil is very friable and it is impossible to transplant with a ball of soil attached to the roots, then in the case of large plants it will be necessary to follow the instructions given for planting trees by the road side. With small plants this should never be necessary.

110. The plants should always be watered immediately after being planted. Afterwards excessive watering should be avoided but water must be given at such intervals as is found by observation to be required. The plants must not be allowed to flag.

Subsequent Transplanting.

111. It will generally be necessary to transplant several times in the nursery lines. In no other way can fibrous compact roots, of the form most convenient for transplanting, be obtained. And it is then

possible to give sufficient space for light and air to each plant while economising the space available in the nursery.

112. It will always be necessary to remove weeds from the nursery lines and to keep the surface soil open with a fine uncaked surface and, as already shown, this should be done by hoeing when the surface dries after irrigation. It will also sometimes be necessary to do some pruning in order to bring the plant into the form required. This will be explained under a special heading.

CHAPTER XII.

Raising trees from long cuttings at Roadside.

113. The following instructions are taken from a note by Major F. M. Westropp, R.E., Executive Engineer, Belgaum District.

114. "Cuttings, 10 to 12 feet long, taken from 'Wad,' 'Pimpri' or 'Nandruk' trees (preferably the latter as being of a hardy regular growth with better shade and appearance) with one end firmly planted 3 to 4 feet in tree pits are self-protective against goats; they therefore save to a very great extent the expenditure required for erecting and the greater expenditure required for maintaining tree guards. These cuttings only require to be protected with fencing when they are planted alongside villages and grazing grounds."

115. "Concentrate the work of tree planting, taking up portions of a road at a time. This gives better results, ensuring better supervision and economy in maintenance and more especially in watering charges. Since a water-cart has to be maintained for each group of trees (watering by head-loads or hand-carts being very expensive and inefficient) sufficient trees should be planted for a water-cart to be working with good efficiency,—see note elsewhere on watering trees at roadside."

116. "Arrange for watering by gurrah as explained under preparing pits."

117. "Planting at the proper season reduces cost of maintenance and gives less failures. Cuttings should be planted not later than the end of June; they thrive best then as the sap in the trees is still rising at the time the cuttings are taken, and the full period of cloudy weather is available for them after they are planted."

118. "The rooting of the cutting may be ensured and growth encouraged by breaking through the bark in a few places along the part to be buried as well as by cutting the end buried with a sloping cut. The object of this is to expose more of the surface, at the junction of the bark and the wood, to the action of the soil, as from this portion of the cut roots germinate and a way is then made for the rootlets to get out from the confines of the protective bark."

119. "There will also be few failures with cuttings if they are not more than 48 hours old when planted, and if the earth in the pits in which they are planted is fully moistened at the time of planting and kept moist with the aid of a buried pot filled with water throughout the first monsoon."

120. "Cuttings should be encouraged to grow upwards by removing all sprouts, except those at the top, during the monsoon following that in which they were planted."

121. "Careful observation is necessary to note the tree which has thriven best in any previous planting operations taken up in the locality. Where cuttings do not thrive, nursery plants must be adopted; a hardy and fast growing tree such as the mango or jack fruit tree should be grown with strong and efficient fences; or the 'Karanj,' which goats will not eat, the leaf being very bitter. Plants must always be well manured, both in the nursery and in the tree pit, to hasten their growth and reduce the period of maintenance."

122. "The rearing of roadside trees, of the wild fig and kindred species, from long cuttings, the tops of which, when planted, are out of the reach of goats and cattle, will almost always be found the most economical method to adopt, provided sufficient care is taken at the time of planting and afterwards in watering. The reason for this is that such cuttings take a shorter time to develop into self-supporting trees, require less protection with fencing, and are little susceptible to being grazed down, the common fate of roadside trees inefficiently fenced. Such cuttings flourish well with moderate watering, especially in light murum or mixed soils and dry climates; but in deep black soils, adjoining rice lands, they do not thrive well and, in places where cartage from distant parts is required their use becomes prohibitively expensive and the liability to failures in their growth great, since they will then have lost their freshness by the time they reach their destination."

123. These are practical instructions which have been adopted in the Southern Division and there is little to add to them. In many districts failure with such cutting or "dams" is caused by white ants. It is a moot question whether white ants attack living wood but few engineers who have had failures with these cuttings will believe that the white ant is guiltless. In such case it is suggested that the cutting should be struck in the nursery or in some place which is free from white ants. It will be more expensive but failure should be obviated. The cutting will then be treated in the same manner as the young trees grown in the nursery.

124. It is especially advantageous to shade these large cuttings when set direct at the road-side. This may be done by tying small branches, palm leaves or straw lightly round the cutting or slipping the same over it. The material used must not be attractive to cattle or goats, and it must not be left too long on the cutting as otherwise it may cause trouble with insect pests.

CHAPTER XIII.

Planting out trees by the Road-side.

Size and age at which the trees are to be planted out.

125. It is hardly necessary to point out the desirability of uniformity in the age and growth of trees in avenues, and the bad effect produced when some of the young trees die each year, to be replaced in subsequent years. When the young trees are planted at the road-side it will be necessary to protect them from damage by goats and cattle and to water them until their roots gain sufficient strength to maintain them from the water in the soil. A very little consideration of the cost of providing and maintaining tree guards and fences and of watering trees scattered along a stretch of road, will be sufficient to show the advisability of doing as much of the work of tree growing as possible in the nursery and of planting by the road-side none but well grown healthy trees which will not require protection and watering to more than a limited extent and for more than a brief period.

126. Trees planted in the streets of towns should as a rule have a stem free of branches for a height of 9 to 11 feet from the ground, and this rule should be followed whenever possible with all road-side trees. Certainly no trees should be planted by the road-side before they are five feet high and it will nearly always be more economical and satisfactory to adopt the limit of 9 to 11 feet for road-side planting. Where the young trees are of slender growth they may be kept in the nursery until they are of considerably greater height than this and pruned back to the limiting height. Subject to this limit, the larger and taller the young trees are, the better they will be for the purpose required, provided that they can be lifted and transported without damage to their stronger roots. Half the failures in road-side planting are due to the use of too small seedlings or of trees which have not had their roots formed by being transplanted in the nursery. If trees are not transplanted they may develop long tap-roots and, as these have to be docked, before the trees can be planted out at the road-side they are put out practically without any roots and have small chance of surviving.

127. The age at which the young trees attain the height required for road-side planting varies with the kind of tree and the soil and climate. It will rarely be less than three years.

Season for planting.

128. The best season for planting at the road-side is about the beginning of the rains when the rainfall is well established, because the air is moist and evaporation from the stem is at a minimum during the time that the roots are growing. Some trees, especially deciduous trees may be satisfactorily

planted out in the cold weather when the leaves have fallen. If full advantage is to be taken of the best season, all arrangements must have been made beforehand for the work that has to be done. Transplanting should be done in rainy or cloudy weather or after 4 p. m.

Selection of Plants in the Nursery.

129. If the nurseries have been sufficiently stocked and have been managed with reasonable care, more plants will be available than are required and a careful choice should be made. Only healthy plants should be taken from the nursery for planting out. This is one of the most important points connected with planting. All weakly or sickly plants should be rejected and thrown away, unless they are too rare or valuable when they may be retained in the nursery for another season, in order to gain more strength. Plants with a single erect stem should always be chosen in preference to those whose stem is crooked or forked. The best time to ascertain whether plants are strong and healthy or the reverse is when they are in full growth in the season before they are required for planting out. At this season the bark of healthy young trees is clear and free from the scaly appearance of sickly plants, and the under bark is a healthy transparent green and full of sap.

Lifting the young plants with and without earth.

130. Plants may be lifted and transported either with or without the soil round their roots. The former method is always the safer, where the young trees have been frequently transplanted in the nursery, if sufficient care can be taken to prevent any injury to the roots and the ball of soil containing them. By this method the roots, when planted out, remain in the same position as in the seed beds and there is little or no check to the growth of the tree. The soil is in intimate contact with the roots and the adventitious root buds form readily. It is a simple matter to prevent the roots from drying during transport, the necessity for which has been explained under the treatment of young trees in the nursery. But it is not always possible to adopt this method. Sometimes the soil of the nursery may be so light and friable that it will not adhere to the roots. Also in the case of large trees or of removal to great distances before transplanting the cost of transport of the trees with soil attached to the roots may be prohibitive.

Transporting the young trees.

131. When possible a ball of earth should be taken up round the roots of young trees in transplanting them, since, by doing this, the risk of moving is reduced to a minimum: when the nursery is near the locality in which the planting is in progress this may very easily be done, though, of course, it will add a great deal to cost of carriage should it be necessary to send the plants any distance. It is well to keep the plants without water for ten days or a fortnight, since this

will check the formation of tender shoots and thereby lessen the risk. But, during the last two or three days before moving, water should be given, since this will greatly facilitate taking up balls of earth with the roots.

132. The precautions to be taken, while transporting, are those required to prevent the roots and tops from drying. Where the trees can be lifted with a ball of earth round the roots the main difficulty will be to prevent the earth breaking away from the roots. If the trees are to be conveyed for a short distance only they may be conveyed in baskets on men's heads when it will only be necessary to prevent the ball from drying. Where they must be conveyed in carts special precautions must be taken to prevent the earth from being separated from the roots. Each ball may be bound with grass or matting or both, or the balls may be packed in baskets or boxes and the intervals tightly filled with good earth or leaf mould. When the trees have been lifted without the soil round their roots, it is even more necessary to take measures to prevent the roots from drying, and it may be advisable to dip the roots in a compost of cowdung and water of the consistency of cream if the plants have to be conveyed for any distance. The plants should in this case be packed closely together in bundles with damp earth or grass round the roots, or the bundles may be placed in boxes filled in with moist earth to cover the roots. In the centre of the bundle should be a core of damp moss or leaves for the plants to lie against. They must be watered as frequently as may be required to prevent the roots becoming dry and the stems and tops may also be damped. Protection from sun and wind should be provided as far as practicable for all plants in transit and, when the plants are packed in bundles, matting or leaves should be bound over the whole bundle.

133. Plants should not be kept out of the ground longer than is absolutely necessary. While on the ground, waiting to be put into the pits, they should be kept in a shady place lightly covered with earth and watered in dry weather. Where possible, no more plants should be lifted from the nursery than can be planted in the same day.

Location of Pits.

134. The distances between the pits depend on the kind of tree used and the scheme of maintenance adopted. It should be about, and rather less than, the natural spread of the full grown tree, say from 35 to 50 feet. Where it is intended to use the trees for timber, then the larger limit should be adopted in order to permit of replanting between the trees, when about half the useful life of the trees first planted has elapsed, with a view to having other trees ready to replace those first planted when the time for felling them has been reached.

135. The pits must be at least of the size required to take in the ball of earth, or the roots, with sufficient space to firm the earth filling between the ball or roots and the sides. And, as will be explained later, it is advisable to place a good sized gharrah in each pit for economy and efficiency in watering. But, unless the soil is naturally very rich, it is advisable, as will be explained when dealing with the soil for filling the pits to have a good body of rich soil in the pit to push on the growth of the tree and reduce the period for which maintenance is required. For this reason the pits should be at least 4 feet wide at top and 3 feet wide at bottom and 3 feet deep. In street planting the size may with advantage be increased but a depth of four feet is sufficient. The shape of the pit is immaterial.

Preparing pits.

136. The pits should be dug as long as possible before the planting is expected to commence, so that the soil taken from them may weather before it is required for filling in again. The upper soil to a depth of about 1 foot from the surface is the best and should alone be used for mixing with the manure for filling near the plant. When digging the pit it should therefore be kept on one side for that purpose. In March or April each pit should be half filled with dry leaves which will become saturated on the first fall of rain. In planting the leaves should be drawn away from the middle and the bottom of the hole so as to leave a clear space 3 feet deep by 2 feet in diameter, which should be filled in with prepared soil on the centre of which the tree should be planted. If there is any reason to think that a bed of sheet kankar underlies the pit it should be dug out and removed.

137. The best soil available should be used. In Major Westropp's note the following instructions are given :—"Finally to encourage growth use manure. A cart-load of good manure mixed with the soil in a tree pit, at the commencement of the monsoon, shortly after the cutting or plant has been planted will result in a saving of one year's cost of maintenance. The manured soil will produce a larger tree in one to two years than unmanured soil will produce in three years. The saving of one year's maintenance charges is well worth obtaining at the cost of a cart-load of good manure, especially where the trees have to be protected from cattle or goats, as the cost of maintaining such protection is great. Where manure cannot be obtained at reasonable rates, a cart-load of black soil should be mixed with the soil in the pits in murrum or red soil and one of red in black soil pits."

Soil for filling the pits.

138. The following is taken from Major Westropp's note :—"Watering charges are the main source of expenditure in tree planting and can be reduced by providing each tree pit with a sound earthen

Providing arrangements for watering.

pot planted as deep as possible in the pit. A country roof tile (not divided in two for roofing purposes) should be inserted into the mouth of the pot to serve as a channel for the water and to prevent earth falling into the pot. The ordinary gurrah holding about two gallons of water, will, when in contact with earth, exude sufficient moisture into the soil in the pit, to keep a sprouted cutting or young plant alive through the dry season. The rate at which water will pass through gurrahs into the earth depends on the nature of the gurrahs and of the climate, also on whether or not the gurrahs are clean and free from earth inside. If the gurrahs are free from cracks or holes through which water can pass, the water will last from 10 to 20 or more days. Since water carts hold from 100 to 200 gallons, a water cart, making two trips per day, will fill from 100 to 200 gurrahs per day, or, allowing 25 per cent. loss in cartage, filling gurrahs, etc., will fill 75 to 150 gurrahs per day. The gurrahs must be filled every ten days and one water cart will then serve 750 to 1,500 gurrahs according to the size of the cart; where the source of supply is not far distant the smaller cart will fill the larger number."

139. The best results will be obtained from using gharas rather deeper and narrower than those in ordinary use; a depth of about fifteen inches with a width of eight or nine inches at the widest part has been found suitable. The side of the ghara which will be turned away from the tree may be painted with coal tar before being buried in the ground; this prevents water escaping at a distance from the roots and thus economises the supply. Special shaped gharas and the use of tar are not essential to the system, which should be adopted in all ordinary cases. With this system there is no danger of over-watering and no waste of water and a glance at the ghara will show at once whether the máli has been neglecting his work. It is advisable to give each máli a bamboo pipe about 4 feet long or some similar arrangement by which he can direct the water with certainty into the ghara while standing outside the guard. Most kinds of guards suffer a good deal of injury from the constant entrance of the máli who cannot often be trusted to make this injury good. Gharas which have been in use a year should be examined at the beginning of the hot weather and replaced if they are broken or if their pores have become choked by mud.

Planting the tree.

140. The pits should first be well soaked with water and then filled in with the prepared soil to such a depth that, when the soil has settled, the trees will stand at the right level. The trees should be set so that the earth will stand round the stems at about the same height as in the nursery, being not lower on the stems and not much higher.

141. Special attention is necessary to the level of the soil in which the tree is planted. If it is much above the surrounding soil, the danger of injury from drought is increased; while if it is below the surrounding soil, water collects in excess round the young trees and either kills them or injures them more or less permanently. It is essential therefore that drainage should be provided where there is any risk of water collecting. The following rules cover all ordinary cases:—

Level of planting.

(*a*) Where the land is high and well drained the trees should be planted flush with the surrounding land.

(*b*) Where trees are planted on the side of an embankment, no special precautions are necessary as water can escape down the sloping bank.

(*c*) Where the land is low-lying, the trees should be planted on mounds about one foot high, with a diameter at least three times the height, and sides sloping very gently. If the sides are steep or the mound narrow, heavy rain may wash the earth away and expose the roots of the tree which will then almost certainly die.

(*d*) The tendency to plant trees below the surface of the surrounding soil must be rigorously checked: mális often prefer this system because it saves trouble in watering and careful supervision of this point is therefore essential.

142. Only one tree should be planted in each pit: the common practice of planting several trees and subsequently throwing away all but one is not only wasteful but injurious. If the tree, to be planted, has a ball of soil round the roots, this ball may be placed on the filled soil and then more soil filled in and firmly trodden down round it. It is essential that the soil should not separate from the ball as the ball will then dry and the tree die. This should be watched shortly after planting.

143. When the tree to be planted is without soil round the roots, more care must be taken in planting. As explained under "Treatment of young trees in the Nursery", the growth of the roots from the growing points is stopped and further growth occurs from adventitious root buds forming on the larger roots and most readily near the stem. And, as pointed out in the same place, this growth of new roots is encouraged by intimate contact of the earth with these larger roots. Therefore the once advocated system of carefully laying out the finer roots has now been largely abandoned. And it is now the best practice to water and ram the earth immediately round the stem for about six inches from the stem. It is not advisable to cut back the roots further than to remove injured portions with a sharp knife.

144. There should always be two or three planters, one to hold the tree in its proper position with its collar at about the point where the final ground level is to be, the others to shovel in the earth round the tree and tread it firmly in, taking care that it is broken up fine and not in large lumps. The earth should be slightly raised round the stem and lower towards the edge of the hole, so that, when irrigated, the stem may stand in a little island.

145. If any damage has been done to the roots so that their growth has been in any degree checked, it is advisable to cut back or shorten some of the branches and to remove some of the leaves if excessive. This is of greater importance in proportion to the dryness of the air at the time of planting.

Protecting the young trees.

146. It is always necessary to keep the young tree steady until the roots have caught hold of the soil, as otherwise the formation and growth of the roots will be prejudicially affected. If stakes are provided for this purpose two should be used for each tree and these should be placed in the line of the prevailing wind. The band or rope should not be tied round the tree but should touch it for half its circumference only. The bark should be protected from damage by the rope by interposing a piece of cloth. And the stakes and ties should be removed as soon as the tree is steady without their assistance.

147. The young trees must also be protected from damage by goats and cattle, especially the former. If the young trees are kept, as advised, in nurseries until they are of such size that goats cannot reach the leaves, thorny branches tied round the stems may be sufficient. This is a considerable advantage as all forms of protection are costly and the loss of efficiency through attempts at economy is probably more costly than any form of protection. The different forms of protection are dealt with fully under fencing in a subsequent chapter to which reference should be made. It is only necessary to point out here that the protection must be maintained in efficient condition until the tree is established.

Watering.

148. It cannot be too frequently pointed out that the watering is the most expensive part of raising avenues and every endeavour must be made to reduce its cost by shortening the period for which watering is necessary. When the tree is first planted the soil should be well and thoroughly watered so that it may be moist to the bottom. Thereafter the principle to be kept in view should be to attract the roots towards the bottom of the pits where the natural moisture is greater. This may be done by placing the water in sunken gharas as explained under "Preparing the Pits." If the trees are watered by irrigation from wells or canals which may in some cases be the most economical method, the water should be kept away from the tree and allowed to reach the bottom of

the pit by the use of small pits filled with sand to which the water may be admitted from the water course when required. Watering by head-loads or bhistis' mussocks or hand-carts is always very expensive and usually inefficient. The common practice by which the bhisti dashes water from the mussock or a pail on to the base or collar of the stem should be abandoned if in use and never adopted. It damages the stem, prevents growth, and keeps the young feeding roots to the surface at the place where least required.

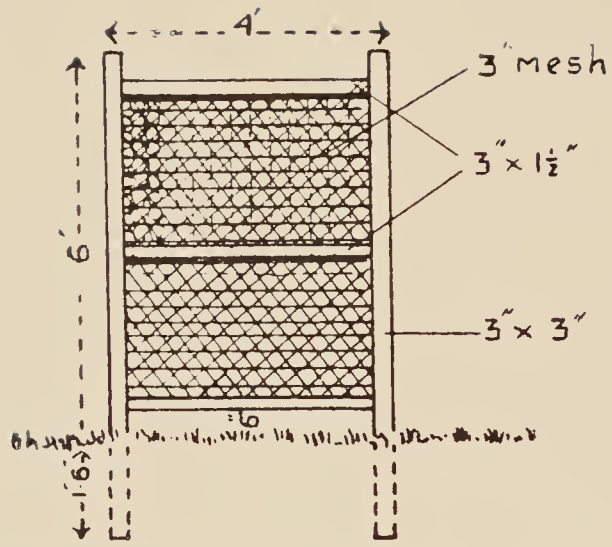

Fig.1 Galvanized-iron netting

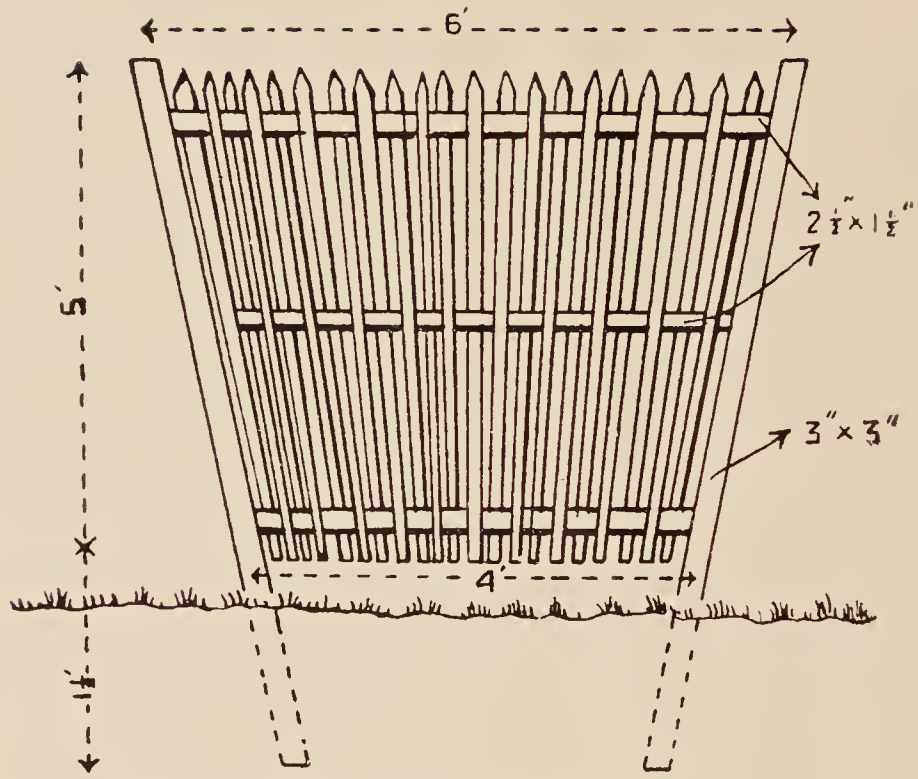

Fig.2. Wooden Guard.

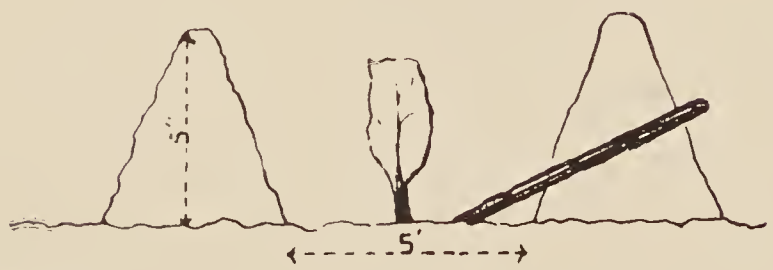

Fig.3.

Fig.4 Thorn Guards

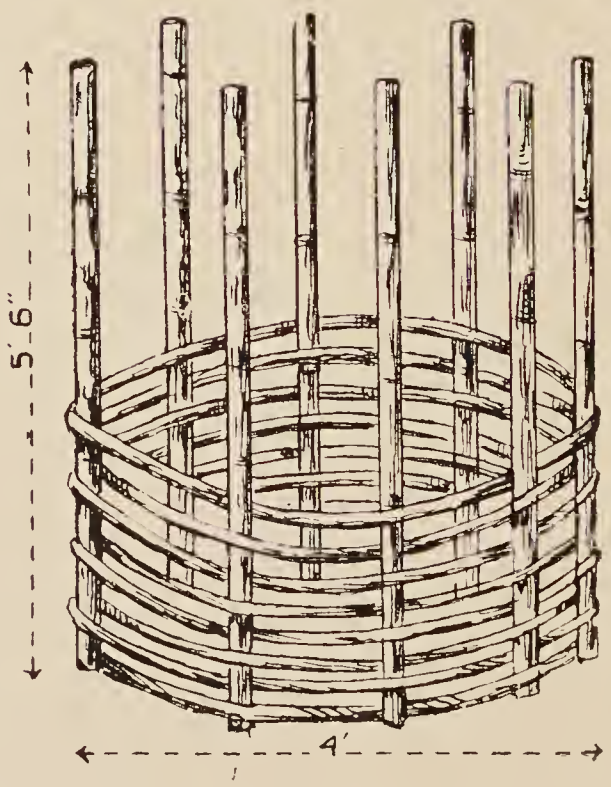

Fig.5. Wattle fencing.

Some forms of tree guards

CHAPTER XIV.

MAINTENANCE.

(1) *Protection.*

General.

149. As soon as the young tree is planted, it requires to be protected against various dangers. A tree may be destroyed byordinary traffic or by animals grazing or passing along the road: and the method of protection must be such that passengers will avoid the tree, and that animals, especially goats will be unable to reach it, while at the same time traffic must not be obstructed. A large proportion of the failures in road-side planting are due to the inadequate fences made for the protection of the trees planted. It is a common sight to see long avenues of trees planted and watered at very great expense, but protected only by thorn branches stuck into the ground. Trees fenced in this manner are always eaten down. The money spent on them might as well be thrown away. With all forms of guards it is essential that the máli should be able to reach the soil round the tree and to break up the surface with his kurpi.

Different forms of guards.

150. No method of protection can be recommended for universal adoption; the different methods in use are discussed below and the decision which of them shall be adopted must depend on the circumstances of the locality :—

(*a*) *Iron guards* (Fig. 1).—These may be made of standards of iron hooped together and enclosed with wire netting. They must be strong enough, that is, the standards must be sunk sufficiently deep, to withstand an animal knocking against them; and they must be high enough to prevent animals reaching over the top. If these conditions are fulfilled, they give perfect protection, but at an expense that appears to be prohibitive in most places. The attempts to produce cheap iron guards have usually been failures: either they have been so weak that they have been destroyed by animals or even passers-by, or they have been so narrow or so short that goats could get at the trees through or over them. They are suitable in and near towns, where traffic is very heavy, and unsightly forms of guards are open to objection. In such places the best pattern is that made of iron hoop lattice, in two pieces, each framed on iron bars, curved and tapered towards the top. When set up, the two pieces are fastened together with wire. This pattern of guard stands firmly, and has the merit that it can be easily taken off a tree that has out grown the need of it and carried off to another place; whereas tree guards forming a complete circle are very

difficult to remove from trees, and are so bulky as to be inconvenient in transport.

(*b*) *Wooden guards* (Fig. 2.)—Have usually been failures, except to a limited extent in and near towns. The remarks made as to iron guards apply here also, while in addition they are often destroyed by white ants, or the materials are used by the people for fuel.

(*c*) *Open work brick guards.*—May be used where bricks are available, but they are not very satisfactory. They keep too much light off the plant, if small plants are used, and they gradually disappear as people carry away single bricks for seats or for use in other ways. If they are made tall enough the loss of light is very serious, while if they are low, goats can reach over the top, and thorns must be fastened round them to prevent this. If such guards are used, the top course of bricks should be set in good mortar.

(*d*) *Live hedges.*—Probably the cheapest protection is a hedge of cactus, not prickly pear, but babul, agave and other thorny plants may also be used. They should be planted at least a year before the tree is to be planted so as to give the protection at the time when it is required. They may be made effective, but it is difficult to make them grow evenly, and a very small space is sufficient to admit a goat inside the hedge. They should not be allowed too near the tree; four feet is the minimum distance that should be allowed, as otherwise they will compete with the young tree for the moisture in the soil. They must be regularly pruned twice a year in order to prevent their becoming too thick and so stopping light and air from reaching the tree. Where live hedges are adopted the supervision over them must be constant and vigilant.

(*e*) *Thorns.*—A circle of thorny branches (Fig. 3) fixed firmly in the ground round each tree may be very effective, if care is taken, and economical if thorns are readily to be had in the neighbourhood. They must be firmly fixed in the ground and pegged down if necessary, and the hedge must be made thick and strong. The thorns will have to be renewed and the hedge repaired at least once a year, and careful supervision is required to insure that the hedge is always effective and especially to see that the máli fills up any gaps that he may have made in order to get at the ground round the young trees. To prevent this a light bamboo step ladder should be used (Fig. 4). These hedges have the disadvantage that they are liable to be broken down and stolen for firewood. Dry thorn loppings piled up round the trees planted make a temporary protection, which is however apt to get out of

repair and always liable to be broken down, or stolen by passers-by to light their fires. The thorn loppings require to be constantly renewed. By the addition of a mud wall and ditch, the wall being roughly built from the soil thrown out of the ditch, the thorn loppings may be made a real defence. The inside diameter of the circle enclosed by the wall should be at least six feet, the ditch being of course outside the wall; the ditch to be useful should be two feet deep. But such a protection takes up too much room for use anywhere except on country roads.

(*f*) *Mud walls.*—This is the commonest form of protection and is effective if the wall is kept in proper repair and enough thorns stuck into the top to prevent animals from reaching over it. The cost of this protection is rather high, and where it is adopted supervision is required to see that the walls are not allowed to fall into disrepair, and that surplus water does not collect inside the guard in wet weather.

(*g*) *Trenches.*—The ordinary trench, dug with steep sides close to the young tree, is most unsuitable. The tree is left standing on a narrow cylinder of earth which soon washes down into the trench and exposes the roots. Where space is available a trench and bank combined make perhaps the most effective guard of all, provided it is properly laid out. The minimum dimensions of such a guard are given below, and where space for these dimensions is not available, some other form of guard should be substituted.

As has been stated the hole in which the young tree is planted should be at least 3 feet deep and 4 feet in diameter at the top and 3 feet at the bottom. Taking the middle of this hole as centre, draw two circles round it, one of 4 feet radius and the other of 6 feet outside the hole; there will thus be two circles, one of 8 feet and the other of 12 feet diameter. Dig out the earth from the space between the circumference of the outer and inner circles, and throw it up on the space between the circumference of the inner circles and the edge of the plant hole, so as to make a trench $2\frac{1}{2}$ feet deep, 2 feet broad at the top and 1 foot broad at the bottom, with a sloping mud bank inside it 2 feet broad and $2\frac{1}{2}$ feet high. Inside the mud wall will be the plant hole. The ditch will thus be at least 3 feet distant from the roots of the young tree. Some babul thorns should be stuck into the top of the bank while the earth is wet.

The bank and ditch should be made during the rains after the tree has been planted. Little repair will be required and as soon as the tree is old enough to dispense with it, the bank can easily be thrown back again into the ditch, and the ground

neatly levelled. Before filling in the ditch it will be as well to take the opportunity of "mulching" the tree roots by half filling the ditch with dead leaves, and saturating them with water. This will tend to draw out the roots and give the tree increased power of resisting drought.

(*h*) Wire fencing is durable and not very costly. The wires must be close together for some height from the ground. The standards usually supplied are too light and are damaged by cattle.

(*i*) Wattle fencing (Fig. 5), used where branches of trees, bamboos, or other suitable material is available, is made by interlacing long flexible branches, basket fashion, round stout uprights embedded in the ground. Such a fence costs little when the material for making it is available on the spot. It has however all the disadvantages of other wooden fences; it gets out of repair very quickly and has to be renewed, the material is liable to be stolen for firewood and the fence broken down in consequence. Such guards are however used largely and successfully in Bengal.

(*j*) Basket guards of somewhat the same shape have been tried in Bombay and may be economical where labour and materials are available. They have the same disadvantages of other wooden guards and in addition are generally too weak and too small in diameter to form an efficient protection.

CHAPTER XV.

MAINTENANCE.

(2) *Watering.*

Need of irrigation.

151. In ordinary cases trees require irrigation for the first three years after planting out, but no absolute rule can be laid down, as much depends on the soil and climate and also on the kind of tree. The need of each locality must be determined by experience. The amount of water required varies with the season; in the rains watering is necessary only during periods of fine weather, but then it is required at very short intervals; in the cold weather the water lasts much longer, while from March to June constant attention is needed to save the trees from injury.

Water-supply.

152. At the time of deciding on the sections of road to be planted, the question of water-supply should be considered, if there is a canal channel cutting the road and giving a constant supply of water, arrangements can usually be made for drawing most of the supply from it. If there is no canal, or only one with an intermittent supply, existing wells can be used, and if there are none, wells must be sunk at convenient distances. Where water has to be carried from a long distance, the expense of irrigation is greatly increased, and there is also greater probability of neglect on the part of the mális.

Conveyance to trees.

153. Local conditions determine the cheapest method of bringing water from the source to the trees. Where the distance is not great, water can be carried in gharas, or preferably in kerosine tins, fitted so as to be slung from the shoulders. In this case it is usually necessary to give each máli a labourer as an assistant during the times when frequent irrigation is needed. It may be more economical to employ bhistis with mashaks, those in ordinary use holding about 8 gallons, or bullocks with pakhals holding about 30 gallons. Where the distance is great, economy can be secured by carting the water along the road; it can be carried in barrels mounted on small country carts or in such other way as may be suitable to the locality. It is advisable to give each máli a bamboo or other pipe about 4 feet long so that he can direct the water to the required place while standing outside the tree-guard; most kinds of guards suffer a good deal of injury from the constant entrances of the máli.

Application of water.

154. The most effective way of applying water to a tree is by means of a ghara buried in the pit as described in paragraphs 138 and 139. The ghara can be filled with certainty by means of a pipe as described in the last

paragraph. Where this method is not employed and water is applied to the surface of the soil it must be remembered that no trees, except a few which are always found growing by water, will stand the constant application of water to their bark. Road-side trees are frequently killed by kindness of this sort. The bark is split by the sudden change of temperature and the sap-wood rots. It is the roots which need water, not the stem. It is therefore well to heap up the earth round the stem and to hollow it out at a distance into a circular ditch, so that, when the water is poured in, the tree stands on a small mound surrounded by water. It is better to give water in good quantity at intervals of three or more days than to give smaller supplies daily, as this causes them to send their roots deeper into the soil where the natural moisture is greater, and a more steady growth is the result. The best time for applying water is the afternoon.

Loosening the surface soil.

155. It is important to keep the surface soil for a foot distance all round the trees as loose as possible. A hard crust on the surface is injurious to the young trees and in particular makes the soil below dry much faster than if the surface is kept loose. Where water is applied direct to the surface of the soil, the ground should be hoed with the khurpi after each watering; where gharas are used, hoeing should be done whenever the surface is getting compact.

Special measures in droughts.

156. Special care is needed to secure that irrigation is adequate in seasons of drought. The responsible official must be on the alert throughout the rains, and when a break is prolonged he must take instant measures to secure that the trees are getting enough water. A year's work may often be thrown away by neglect for a very few days at this season.

CHAPTER XVI.

Maintenance.

(3) *Miscellaneous.*

General.

157. The principal operations employed to maintain young trees are those enumerated in the two preceding chapters, keeping the guards in an efficient state, and regulating the supply of moisture. There are, however, a few other points requiring attention.

Pruning.

158. It has been said that it is better not to prune at all than to prune badly, and skill is required for good pruning. This pruning is required in the nursery, during the period of maintenance and during the after-life of the tree. For convenience it is dealt with in paragraphs 162—172 in the chapters on Management of Avenues.

Straightening crooked trees.

159. Much pruning should not be required at the road side if the trees have carefully tended in the nursery, only the best selected for planting at the road side and only large trees planted as recommended. If small trees are planted occasionally some get a crooked start or are bent by the prevailing wind. In such cases the tree should be straightened by tying the stem to a straight stick. It is not advisable to fix this stick in the ground close to the stem as the roots of the tree suffer; it is better to support it by tying to two stakes one on either side of the tree and in the line of the prevailing wind. The tree may be tied to the straight stick at one or more points as needed, but special care must be taken that the bark of the tree is not injured in any way in this process, and the material used for tying should be soft unspun hemp fibre, or some similar substance, and not cord or string.

Replacing failures.

160. If a length of road has been planted early in the rainy season, the trees should be examined carefully after three weeks or a month, and any that have not made a good start should be pulled up and replaced by new plants from the nursery. Where, however, planting has been delayed till late in the season, this course is not practicable, and the failures must be left to be replaced in the next year.

Termination of maintenance.

161. When the period of maintenance, prescribed by the plan, is drawing to a close each length of avenue should be carefully inspected to see whether the trees can safely be left to themselves. It may be found that accidents of season or careless work have resulted in the trees being backward: and if there is any reason to think that any considerable

number of the trees still require attention, arrangements must be made to leave a máli in charge for another year. The working plans usually provide a small margin for expenditure on extra work of this kind. If there is no doubt that the trees can be left to themselves, the length of avenue should be classed as established, but the responsible official should visit it occasionally for the first year and, if he sees that the trees are suffering from any cause, he should take measures at once to have them attended to. If there is any doubt whether the trees are established or not, it is a safe rule to assume that they need more attention.

Removal of tree-guards.

It is not necessary to remove the tree-guards immediately an avenue is classed as established. This should be done only when the lower branches of the trees are sufficiently high to be out of reach of cattle and goats and the trunks are strong enough to withstand cattle. If this is not the case, any guards except live hedges should be left standing for a year or two more : live hedges, however, should be destroyed at once as the risk of their growing into rank jungle and injuring the tree is too great to be run.

CHAPTER XVII.

Management of Avenues.

(1) *Pruning.*

General.

162. The most important part of this management, after the trees have become self-supporting, will consist of pruning. Thinning will rarely be required as the maintenance of trees at the road side is usually so costly that no more will be planted than are wanted for the avenue.

Pruning.

163. The object of pruning is to obtain a shapely healthy tree with shade not overthick. It should begin in the nursery and continue almost to the end of the life of the tree. It has therefore been thought best to deal with it as a whole in this place.

164. Since the tree must not interfere with the traffic on the road, it must have a clear stem free from branches for a certain height from the ground. This height will vary with the conditions and is sometimes given as 8 to 10 feet; in Europe and America the rule is 9 to 11 feet. If the branches grow horizontally it may be necessary to shorten some of these. But the height of 11 feet to the first branch should not be exceeded. Keeping this height from the ground clear of branches helps the drying of the road after rain and thus reduces to some extent the wear of the road surface.

Forming straight boles in young road-side trees.

165. The smaller the branches are when pruned, the less the harm done. The natural tendency of many trees, notably the firs and pines, is to grow with a straight stem and regular conical crown. Other trees, including most of the broad-leaf trees, are most irregular in their growth and naturally have many trunks, or great lateral branches. By the judicious pruning, while young and small, of the lower branches, isolated trees growing along roads may be given tall, straight stems, as if they had been grown in close contact with other trees in a well managed forest.

166. To obtain these conditions, the *trees should be pruned while young.* The terminal buds of any secondary leading shoots that appear should be pinched off at once; and the lowest lateral branches should be pruned off *each year* while they are *still small.* If the top is weak or broken, it may be cut off and one of the side branches allowed to take the lead.

167. Not more than about two rows or tiers of branches should be removed in one year. If too many of the branches are removed,

the health of the tree suffers; it becomes top heavy and has to be supported. Nor ought the pruning to be commenced too soon before the tree is advanced enough to stand such treatment. The leaves of the branches perform the function of manufacturing nutriment for the tree and their removal too early, or too many at a time, causes the growth of a spindly weak stem. In addition the strong sun, falling on young bark, especially if wet, causes it to burn or toughen and the tree consequently becomes hide bound. The age at which pruning should be commenced and the amount to be pruned depend primarily on the rapidity and vigour of the growth. The regular stems seen in the avenues of European cities are formed by keeping the lower branches pruned while the young trees are still in the nursery. Such trees rarely require much pruning in after-life.

168. Pruning at the road side will follow the same lines until the stem is clear of branches for the desired height from the ground. After that, except for the removal of broken branches, the pruning will consist of removing superfluous branches with a view to keeping the tree shapely, to prevent it from obstructing the traffic, to reduce the shade when desirable in the interest of economical road maintenance, and sometimes to rid the trees of certain fungus diseases or insect pests.

Axes not to be used in pruning.

169. The pruning of road-side trees in this country is generally done by a coolie climbing the tree and hacking off the branch it is wished to remove at six inches or a foot from the stem, leaving a jagged, unsightly stump. These snags rot and bring about the quick decay of the tree. All this is avoided by using the saw instead of the axe and by cutting off the branches smoothly flush with the stem. Such wounds soon heal and become covered with bark. When cutting back lateral branches always cut at a fork. Valuable timber trees are constantly hacked to admit a free circulation of the air, as it is called, and are in consequence rendered useless, except for firewood. There are few stations or road-side avenues where such eye-sores are not to be found. *The use of the axe by coolies should be strictly prohibited.* Pruning could be done with an axe if sufficient care were taken. But this care never is taken, and the only possible way to prevent *hacking* is not to allow axes to be used.

170. All prunings should therefore be done with the saw or good sharp steel instruments. Small branches or twigs should be cut with a sharp pruning knife, larger branches with the saw or pruning chisel. In removing a large branch first cut through the bark all round with the pruning knife or chisel; then saw it off roughly about a foot from the trunk, cutting the under side first and afterwards the upper a few inches further from the trunk, and finally saw off the stump: or the

pruning chisel may be used first to cut all round the branch before using the saw. In this way there will be no tearing of the bark. After the branch has been removed, any jagged ends left should be pared smooth with the pruning knife, and then the whole cut should be painted over with tar. The cut, where possible, should be vertical, or slant downwards, so that the rain water may not lodge on it or get into the stem through the wound. Where the wound is necessarily large, it should always be covered with tar to protect it against moisture and decay.

Season for pruning.

171. The end of the cold weather, just before the leaves appear, when growth is least active, is the best season for pruning, as the wounds are then left exposed for the shortest time possible. If done during winter, they remain uncovered too long; if during the warm weather, when the trees are in full growth, the wounds *bleed*, and tar, if used, will not adhere to them.

Cavities in tree trunks.

172. Very often when a tree has been long neglected, the trunk is seriously injured by cavities caused by the decay of dead or broken branches. It is not claimed that pruning can remove defects of this nature; but it can, with proper application, arrest the progress of the evil. The edge of the cavity should be cut smooth and even, and all decomposed matter in the interior carefully removed. A coating of coal tar should be applied to the surface of the cavity, and the mouth plugged with a piece of well-seasoned hard wood securely driven into place, the end of the plug being then carefully pared smooth and covered with coal tar. To guard against the attacks of insects or fungi, it is sometimes advisable to nail a piece of zinc over the plug in such a way that the growth of the new wood may in time completely cover it.

Bark, or hide-bound trees.

173. It is believed that in some cases cortical or bark pressure becomes so great as to retard the growth of the tree, preventing the formation of the normal amount of new wood. In temperate climates this unhealthy condition is considered to be indicated by the natural shedding of the leaves being impeded. The remedy adopted is to make longitudinal incisions in the bark, without removing any tissues. This is believed to relieve the bark pressure, and is followed by a natural increase in thickness of the affected stem.

CHAPTER XVIII.

Management of Avenues.

(2) *Pollarding, lopping and felling.*

Pollarding.

174. It is often useful to pollard trees. This practice is sometimes condemned, but in a dry country it is an excellent way of obtaining an annual supply of leaves for fodder from certain kinds of trees and of small branches for fuel or for basket-work. The method should not be applied to trees grown for timber. But in the case of the numerous trees of which the leaves furnish very good fodder while the wood is inferior, and in the hills, where the local supply of wood is more than sufficient while fodder is scarce, the method is to be recommended for broad-leaved trees outside the special forest areas reserved for timber growing.

175. Pollarding is also useful where it is wished to obtain greater shade from trees growing along a road-side. An avenue of well-pollarded trees is anything but unsightly.

Lopping.

176. Lopping, by which is meant cutting off the branches only, is also a useful method of exploiting certain classes of trees where only small branches and leaves are required. The usual way in which trees are pollarded or lopped by villagers cannot, however, be too much condemned. The method defeats its object, which is, or should be, to get as many small branches as possible. But by the rough hacking off of the larger branches, as is usually done, the vigour of the tree is so much diminished that it yields little or nothing.

Season for pollarding or lopping.

177. The proper season for pollarding or lopping is the winter, when the sap is down. If trees have to be lopped for fodder during the season of vegetation, a certain proportion of the leaves and branches should be left to perform the work for which the tree requires leaves.

Prevention of injury.

178. A watch must be kept over the established avenues, particularly in the neighbourhood of towns, to see that branches are not being cut for fodder by camel-drivers or goat herds. Trees suffer serious injury owing to the repeated stripping of leaves and young branches that results when the people are allowed to make free use of them. In times of famine special orders will issue from Government regarding the utilisation of trees that will serve as food for cattle.

Felling.—Age at which to fell.

179. The age at which trees should be felled depends chiefly on the purpose for which they are grown. Roadside trees are grown primarily for shade, but also for ornament or for the return which may be obtained from the fruit or other produce or the timber. Ordinarily trees should be felled as soon as they have passed their prime and begun to deteriorate in value instead of increasing. But the cost of producing road-side trees, particularly where this requires watering, is great and the shade is of primary importance. When the return is expected from the sale of the timber the trees should be felled at the time when the timber begins to deteriorate, instead of increasing, in value. Where the fruit or other produce is looked to for the return the trees should ordinarily be felled at the time when this shows signs of diminishing. All road-side trees should be felled at the time when, if not before, the shade given is decreasing and the first signs of decay are apparent. The time of felling should be foreseen and interplanting should have been taken in hand in advance so that the roads may not be entirely without shade. Except where it is necessary to cut out trees showing premature signs of decay, it is advisable to fell whole sections or miles at the same time because of the economy of interplanting at one time.

180. Felling is also necessary when the trees are overcrowded, which should never be the case if they have been planted the proper distance apart. Existing avenues should be examined systematically to see if the trees are overcrowded. The trees to be felled should always be selected and marked by some responsible officer. In making the selection care should be taken to remove the trees which are valuable for timber only in preference to those which yield an annual income, and mis-shapen or deformed trees should be removed in preference to those of normal growth.

181. In felling a tree the earth should first of all be grubbed away so as to leave the upper roots exposed and the trunk cut through at a point about $1\frac{1}{2}$ or 2 feet below the surface of the ground. This is the method ordinarily followed in the country, and not only does it add to the length of the timber, but it prevents, in the case of most trees, the growth of suckers from the stock.

CHAPTER XIX.

Management of Avenues.

(3) *Realisation of Income.*

Sources of income.

182. The income credited to arboriculture is derived from the following heads :— (1) sale of fallen trees ; (2) sale of trees that have been felled ; (3) sale of loppings ; (4) sale of annual produce of trees ; (5) sale of roadside grass ; (6) miscellaneous. As a general rule whatever has to be sold should be sold by auction.

Felling.

183. When trees are to be felled it is best to sell them standing, the purchaser being bound to fell in the manner prescribed in paragraph 181.

Lopping.

184. Lopping should never be done by the purchaser, as it is hopeless to expect that the work would be properly executed. The superfluous branches must be cut by the men employed on the avenues, and then sold.

Grass.

185. The grass on all roads is in some Provinces sold for the benefit of arboriculture, whether there are avenues on the roads or not. The value of grass on Provincial roads is credited to the Public Works Department, that on district roads in the accounts of the District Board. Care must be taken that the grass does not fall into the hands of persons who will use their position to levy blackmail on the owners of cattle traversing the road. The local knowledge of the Mamlatdar or other officer who conducts the sale should be employed to see that the contract is given to men of the right class.

Special care is needed on this point in localities where the supply of grazing is so large that there is little demand for the roadside grass. In these cases it may even be better not to sell the grass at all; but, where the demand for grass is great, sales should invariably be made as otherwise the unrestricted grazing is likely to result in serious injury to the trees.

Conditions of sale of grass.

186. Contracts for the sale of grass must provide (1) that the grass shall either be cut with a sickle or grazed off the road and that the khurpi must not be used ; (2) that the contractor is responsible for all damage caused by animals to trees on the roads which he has taken. Where the roads have young trees a penalty of a reasonable sum, as liquidated damages, should be fixed for each tree destroyed during the period of the contract.

CHAPTER XX.

The provision of avenues in Sind.

General.

187. The technical instructions contained in this manual are intended for general application in the Presidency. For use in Sind they must be modified as necessary to meet the very different conditions. The great heat of Sind makes shade more desirable, while the absence of rain, the existence of kalar and the presence of camels render its provision more difficult. Generally the principles of concentration of effort and the reduction of the period of maintenance at the roadside, the importance of which has been urged for the Presidency proper, are of even greater importance in Sind.

Choice of trees.

188. The great variation of temperature, ranging from excessive heat in summer to frost in winter limits the selection to a very small number of kinds. The trees commonly grown on roads in Sind are the following:—Bar (Banyan), Pipal, Siras, Nim, Tali (or Sinji), Bahan, Tun, Lesuri, Babul and Ber. In deciding which trees to plant there are five points to be considered:—

Resistance to drought.
Resistance to excess of water.
Resistance to frost.
Suitability to inferior soils such as sand or kalar.
Shade.

For resistance to drought and excess of water the Babul is the best tree and the Ber the next best. The only other tree which approaches them is the Bahan. In rice lands or very dry places it is best to grow nothing but Babul with a few other kinds at the canal bridges for the sake of variety. For resistance to frost the only two trees in the list given above which resist frost are the Tali and the Bahan, while the Babul is about the worst in this respect. The Mulberry and the Persian Nim also resist frost, but are difficult to grow on the roadside in Sind. The Babul and the Ber are the only trees in this list which will grow in real kalar. In sandy places the Nim is the best and the Tali and the Bahan the next best. For shade all the trees in the list are good except the Bahan, Tun, Babul and Ber. The last two give fair shade from August to March, but not during the rest of the year when shade is most wanted. The Bahan gives very fair shade, but the Tun has no virtues whatever except its great size.

189. In Sind poor shade is better than no shade and, where none of the trees in the list given above will grow, the Lao (Asari or great Tamarisk), the Kand and the Khabar or Dyar may be tried. The

Mango and Jammu are garden, not roadside, trees, are very susceptible to frost and hot winds, and the Mango at least grows far too slowly. The Tamarind is a good tree, but is usually killed by frost in Upper Sind. The Date Palm is not a shade tree and grows slowly, but will grow anywhere and is useful on a bare kalar road.

190. It is difficult to obtain any return from roadside trees in Sind. The wood of the Babul is good and valuable and the bark is used for tanning. It is difficult to prevent men from taking bark from living trees for this purpose. The Tali gives excellent wood and is probably the best tree to grow near canals.

Nurseries.

191. In choosing sites for nurseries the aspect is of especial importance in Sind, as the young trees must be protected from sun and frost. An east aspect is the best, as regards protection from sun, the sun being less powerful in the morning than in the afternoon. The cold winds which bring frost come from the north-east and protection with reed mats or branches of Tamarisk or other trees must be provided.

192. Young nursery plants require watering at least once a day during the hot weather and the best time for watering is the afternoon. Where irrigation by canal water or from a well is practised it is best to have narrow nursery beds and to supply the water by percolation from the channels between them. The practice of flooding the surface is bad because a crust is formed on the surface of the bed.

193. As a general rule the early spring, just before the young leaves appear, is the best time for sowing all kinds of seeds which do not require to be sown at once when they ripen. In such a climate as that of Upper Sind pots should not ordinarily be used as the heat and evaporation kills the seedlings. If used they should be sunk into the ground or protected in some other way. The Sindhi "dilo" is the best pot for the purpose. The Bamgan and Tali grow well from cuttings. It is a mistake to grow Tali from seed. The cuttings hardly ever fail and, if well treated, make quite big trees in a few years.

Planting trees at the roadside.

194. In Sind it will often be practicable to irrigate the trees with canal water and even old trees are the better for water in the hot weather. In such cases the best plan is to dig ditches along the road and to fill them with water. The pit in which the tree is to be planted should be on the side of the ditch which is further from the road, as trees on the inner side cannot be protected from camels, but care must be taken that the trees shall not injure the adjoining crops, and, where the road is very wide, the ditch should be dug at some distance from the edge of the road. The water should reach the roots by percolation and not by flooding the surface.

195. The best season for planting trees is August. In May, June and July the ground is too hot. Where it is practicable to give water plentifully in these months, the young trees may however be planted with advantage at the time recommended for sowing seeds in Sind.

Time of planting.

196. In places where canal water can be obtained in May, not even young trees require anything else. In such places the work of the máli is simply to clear and fill the ditches, prevent overflows and preserve the trees from herds and herdsmen. The ditches should, as a general rule, be filled with water as often as possible during the whole inundation season. With very young trees it is of course necessary to take care that the water does not rise too high, but mális are much more likely to fill the ditches too seldom than too often and, in practice, the secret of tree-growing is to clear the ditches well and to fill them early and often. Ditches should never be filled or kept flowing at night, or else overflows and breaches are certain to occur.

Watering.

197. In lift countries, or flow countries, where the fallow period is long canal water often cannot be got every year, so that it becomes necessary to water trees by hand—a much less cheap and efficient method. Also where canal water cannot be obtained until June or July, young trees must be watered by hand from the beginning of the hot weather. It is unnecessary and usually harmful to water trees in the cold weather. The máli should spend that time in road repairs, mending hedges and clearing ditches.

198. In rice lands the object is not so much to water the trees as to save them from drowning. In very wet rice lands, especially if the soil is kalar, it is pure waste of time to try to grow trees at all. Babul trees will grow in bad kalar if they get the right amount of water, but they grow there very slowly and, as long as any good soil is left unplanted, it is waste of money to plant in bad soil wherever it may be.

199. The young trees must be well protected from camels and goats. The camels are probably best kept off by a ditch which must be at some distance from the tree, the spoil being thrown up outside the ditch in the form of a mud bank or wall which should not be more than $2\frac{1}{2}$ feet high. This bank should have some thorny branches of babul stuck into the top while it is wet. The bank and ditch should be made after the tree has been planted and the ditch should be at least 4 feet from the roots of the young tree and not more than $2\frac{1}{2}$ feet deep. Little repair will be required and, as soon as the tree is old enough to dispense with it, the bank can easily be thrown back into the ditch, and the ground neatly levelled. Before filling in the ditch it will be as well to take the

Protection.

opportunity of mulching the tree roots by half filling the ditch with dead leaves if available and saturating them with water, and some manure may be mixed with the earth first filled in. This will tend to draw out the roots and give the tree increased power of resisting drought.

200. Where a ditch parallel to the road is used for irrigation the trees should be planted outside and the ditch will then form part of the protection. Hedges of dry thorns should be made on both sides of the ditch in a continuous line and carried round the circular ditches advised above. The trees must also be protected against the herdsmen, but this can only be done by the tree- protecting staff.

201. It has been stated that young trees in the nursery must be protected from frost. If small plants are used for planting, in localities where frost is to be expected, it will be necessary to protect them for at least the first and second cold season by thatching grass fixed round each tree. The grass should be removed, as soon as the danger from frost ceases, in order that the trees may get the full benefit of the spring sunshine. Where good sized trees are used for planting, as recommended in this manual, so much protection may not be necessary except with trees of the better classes.

Pruning.

202. In Sind it must be recognised that the temptation to lop and prune trees for feeding goats is great, and no pruning should be permitted except under the special instructions of the supervising officer. The use of the axe must never be permitted; pruning is work for an expert, not an unskilled labourer.

Staff.

203. In this chapter it has been assumed that mális will be employed and this is advisable, where practicable, for all work connected with tree-growing. The instructions given in this manual apply equally to Sind. But competent mális are difficult to obtain in Sind, and it is even more necessary to concentrate the work and to confine it to land where trees will grow until none such land remains unplanted. A good máli ought to be able to look after 250 young trees, irrigated with canal water, if they are in one place.

204. Mális as well as beldárs should be under a darogha who has done the work himself. No road establishment, unless specially trained, should have any authority over them, and for really good work it is very desirable that the Assistant Collector should do a great deal of the supervision himself.

CHAPTER XXI.

Planting by private persons.

205. Every encouragement should be given to private persons who may be willing to plant trees on public roads at their own expense. The following rules have been laid down to regulate such planting on roads under the District Board :—

Permission to plant.

(1) No private person shall be allowed to plant trees unless he obtains written permission to do so from the Chairman of the District Board.

Conditions.

(2) In applying for permission the person who wishes to plant must consent in writing to abide by the following conditions :—

(i) Only trees of a kind or kinds approved and specified by the chairman shall be planted.

(ii) The planting shall not be done by seed, or by seedlings of less than two years' growth.

(iii) The trees shall be planted in regular lines, and at such distance from each other and from the middle of the roadway as the chairman may prescribe.

(iv) The planter shall provide for the irrigation and protection of the trees until they grow sufficiently large to need no more attention.

(v) The trees will be the property of the person who plants them and his successors; but he will not have power to lop or fell without the permission of the chairman, and he will have no claim to the land on which the trees stand. He will, however, be entitled to take the fruit and all dry or fallen wood, as well as all loppings made in the ordinary course of arboricultural operations.

(vi) On planting a tree the planter shall give intimation to the Mamlatdar concerned, specifying the kind of tree planted and its position.

(3) All permissions to plant that may be granted by the chairman, shall be intimated to the Mamlatdars concerned. The Mamlatdars shall keep a list of such permissions and shall compare it from time to time with the register which is maintained as prescribed below, reporting to the chairman any cases in which permission to plant has not been taken advantage of within three years.

(4) When trees planted under the preceding rules have grown sufficiently to be no longer in need of irrigation or protection, the planter shall be entitled to obtain from the chairman a sanad declaring his ownership of the trees and setting forth the conditions under which they were planted. Sanads will be issued through the Mamlatdars concerned and will be made out in the form given in Appendix G.

Grant of sanad.

206. The provisions in the last paragraph apply only to district roads. The Superintending Engineer will decide whether private persons can be allowed to plant trees on provincial roads. When permission is given, the procedure laid down in the last paragraph should be followed generally.

207. A new register will be opened in each táluka in the form given in Appendix F at the end of this manual, a suitable number of pages being allotted to each road on which private planting has been permitted. Entries will be made in this register on receipt of reports from planters under condition (2) (vi) above; the reports will first be verified under the orders of the Mamlatdar who will sign each entry below the date in column 9.

Register of trees planted.

208. The entries of previous years will be tested on the spot from time to time under the orders of the Mamlatdar; if any trees entered in the register are found to have died or disappeared, they will be struck out from the register under the Mamlatdar's signature.

Testing.

209. A similar register should be maintained by the district engineer for provincial roads where permission to plant has been given under paragraph 206.

Register for provincial roads.

CHAPTER XXII.

Groves.

Encamping grounds.

209. Shade should be provided as far as possible on encamping grounds, especially on the roads where there is a large pilgrim traffic. The system of planting should be generally similar to that indicated for avenues, except that as many lines should be planted as there is room for, and that the lines should be the same distance apart as the trees in the line. Trees giving thick shade should be preferred, but the tamarind should not be planted in ordinary circumstances as there is a prejudice against sleeping under it.

Groves on barren roads.

210. Endeavours should be made to plant groves of trees at intervals along lengths of road where the soil is barren and avenues cannot be expected to succeed. The need of shade is greater on these roads than anywhere else. The least barren patches of ground on the roadside should be picked out with the assistance of practical cultivators living in the neighbourhood; the presence of hariali grass almost always indicates a patch of better land. Where a patch appears to be suitable, a hole should be dug in it to a depth of four or five feet and the nature of the sub-soil carefully examined; if it is stiff clay down to five feet, there is little prospect of getting trees to grow, but if loam or sand is met with by that depth there is a good chance of success and the patch may be chosen for operations.

Special methods of planting on barren land.

211. The work of planting such patches differs from that indicated in previous chapters in the following respects :—

(1) The holes for trees should be closer together as they will not spread to the same extent: about two-thirds of the distance apart recommended for loam is a fair general rule.

(2) The holes should be dug down to the loam or sand: the clay taken out of them should not be returned, but should be thrown aside and the holes should be filled with good loam obtained from a better part of the roadside, or (on payment) from an adjoining field.

(3) Special attention is needed to see that the trees are not exposed to the danger of water-logging, as these barren tracts frequently tend to become swampy in the rains.

(4) More frequent irrigation and tillage of the surface will probably be necessary.

(5) No attempt should be made to grow delicate trees: hardy trees such as the nim are the likeliest to succeed.

(6) If the road is not well supplied with water, a masonry well should be sunk among the trees if any pious person can be induced to confer this benefit on the public: a well with a clump of even half a dozen trees giving a little shade will be sure of the cordial appreciation of travellers.

(7) It will be obvious that the planting of clumps of trees on barren roadsides will cost more than the same number of trees on fertile soil, so that when there is much planting to be done on loam it should have the preference; but, where most of the unplanted roads are on barren soil, endeavours should be made to provide a certain amount of shade on them as suggested above.

CHAPTER XXIII.

(1) *Selection of Trees for Avenues.*

212. The objects to be aimed at in choosing trees for roadside avenues are the following :—

(1) Provision of shade for travellers.
(2) Addition to the food-supply of the people.
(3) Provision of a fodder-reserve in famines.
(4) Securing as large an annual income as possible.
(5) Improvement of the landscape.

These objects are stated in the order of their importance and should be carefully considered when operations are being planned. As an exception, the second, third and fourth objects may be disregarded in planting roads in the immediate neighbourhood of civil stations and large towns. In the case of station and town roads the importance of even the first object is diminished.

213. The best general principle to follow is to select trees of those kinds which are found growing under similar conditions in the district, and which best fulfil the objects stated in the last paragraph. Many trees which yield a supply of food or other produce, and therefore an annual income, are good shade trees and also handsome, so that it is possible, by the exercise of a little care, to secure, in many cases, almost all the objects which are desired. Advice, when required, may be obtained from the Forest officers, or, in the case of ornamental avenues, from the Director of Agriculture or the Superintendents of any of the public gardens.

214. As a rule the trees in the same length of avenue should be of the same kind. If the trees are uniform in look and growth the effect is excellent and a much better price can usually be obtained for the produce where all trees of the same kind are together. Where the final avenue is intended to be formed of slow-growing trees, quicker-growing trees may be planted between them to give shade while the others are growing, but care must be taken to cut back or fell the latter before their shade or roots begin to stunt the growth of the former.

But for general planting trees should be selected which are known to grow well in the vicinity or in similar localities. It is of course desirable to introduce new kinds which are useful or ornamental, but, where the success of the experiment is doubtful, it should be tried on a small scale.

215. A list of trees which are more or less suitable for avenues is given below. Information as full as is available is given for each, but it must be remembered that local conditions may render this information incorrect and it will be for the Officers in charge of operations to note such cases. For instance, a tree may be practically evergreen in one district and deciduous in another. Again, in the case of many trees, little information is available; and this portion of the manual should be re-written when the blanks in the information have been filled.

(2) *List of Trees.*

Acacia arabica. Vern. Kikar (Hind.), Babul (Már.).—Grows freely from seed and in any soil but is best in good soil with sub-soil moisture. The seed should be soaked for some days in cowdung and water before sowing or the seed may be obtained from goatherds after passing through goats. The wood is tough, close grained, very durable if water seasoned, and forms an excellent fuel. The bark is used for tanning and dyeing and is a powerful astringent. A gum exudes from wounds in the bark which is used in native medicines and by dyers and cloth-printers. The unripe pods are used in the preparation of ink. The trees are often lopped and mutilated for fodder for cattle. The chief objection to its use lies in its thorns, which hinder the use of bicycles on the road. It is also too useful and is consequently liable to damage by people wanting bark or fodder. If grown in a nursery for road-side planting it should be transplanted and the long tap root then pinched off. A seer of seeds contains 6,240 seeds. Distance apart for avenues 30 feet.

Albizzia lebbek. Vern. Siris (Hind.), Chichola (Már.).—Deciduous. Bark dark grey or brownish. Grows readily from seed, which ripens in September; is hardy but dies easily (at least in very dry districts) and its branches are brittle. The wood is dark reddish brown, tough, seasons well, works freely and takes a fine polish. It is a common road-side tree. Its advantages are its hardiness and the fact that it needs little water. The chief disadvantage is its leaflessness in the end of the cold, and in the hot weather. It should not be used where the next tree Albizzia procera will grow. A seer of seed contains 7,420 seeds. Distance apart for avenues 40 feet.

Albizzia procera. Vern. Safed or Dun Siris (Hind.), Kinni Gurar (Már).—A tall handsome tree. Rarely quite leafless. Bark yellowish or greenish gray. Easily propagated from seeds or cuttings. Seed ripens in April and should be sown at once. Is a native of Burma, Bengal, and the North-West Provinces near the hills but is now fairly common all over India. The wood is straight and close grained, seasons well and is durable. An excellent tree and should always

be preferred to the common siris where it can be well irrigated when young.

Aleurites Moluccana.—Candle nut tree. Evergreen. Middle sized. A handsome tree which grows readily from seed. Indigenous probably in Malay Archipelago. Seed can be obtained from the Victoria Gardens, Bombay. Is used as a roadside tree in Bombay and grows also in Lahore and in Belgaum Fort. Wood soft. From the fruit fat is pressed and sent to the European market. The seed ripens about July to September and should be sown at once. The seed is large. Distance apart for avenues 40 feet.

Artocarpus integrifolia.—Jack fruit tree. Vern. Phannas (Már.), Halasur (Kán.). A hardy evergreen tree. Indigenous in Kánara forest both above and below the gháts. The seed should be sown at once and either at site or in baskets or pots as it does not transplant well. Distance apart for avenues 30 feet.

Azadirachta Indica. Vern. Nim.—A large evergreen tree, very hardy and will grow almost anywhere. It gives good shade if watered and is rarely without leaves for any time. The growth is fairly quick and it coppices well when cut. The wood is red or brown, compact, sometimes resembles mahogany, takes a beautiful polish, is fairly durable and is so bitter that white-ants and other insects will not touch it. It is used for construction, cart-building, ship-building and agricultural implements; it is held sacred by Hindus and used for making idols. The sap is used medicinally; a gum, used as a stimulant, exudes from the bark. From the fruit an oil is extracted. The leaves are used medicinally and the bark is sometimes used as a substitute for Peruvian bark. Cattle and goats do not eat the leaves and therefore little protection is required. As a rule no income can be obtained from it except as timber. It is propagated from seed which ripens in July and August. The young plants require little watering. A seer of seeds contains 10,850 seeds. The seed should be sown at once. Distance apart for avenues 30 feet.

Cæsalpinia coriaria.—The Divi divi tree. Is a smallish tree used as roadside tree in Dhárwár and probably other districts. It is believed to be evergreen. The pods are used for tanning and a fair revenue is derived from the sale of the right to collect them.

Calophyllum inophyllum. Vern. Undi.—A handsome evergreen tree with thick dark green glossy foliage. Grows well close to the sea. Is brittle and liable to damage from wind. The white flowers are pretty. It grows readily from seed which should be sown fresh.

Cedrela Toona. Vern. Tuna (Hind.), Todu (Már.), Tundu (Kán.). —A tall and remarkably handsome tree, with beautiful dark green leaves and dense shade. Practically evergreen. Indigenous in lower

hills of the Punjab and cultivated throughout India. Requires a rich soil, but will grow on any inferior soil if kept moist enough; very liable to the attacks of an insect which consumes the pith of the young shoots, but the tree is not as a rule killed by it. The wood is red, not strong, but seasons readily, is easily worked and polishes well, and is highly valued for furniture, door panels and carving. It is propagated from seed which ripens in June and should be sown as soon as collected, as it is very difficult to keep. The nurseries should be shaded as the young seedlings suffer from sun. The soil should be rich, well worked and clear of roots. The seed must be covered lightly. The seedlings will require a good deal of watering at first. A seer of seeds contains 365,500 seeds. Distance apart for avenues 40 feet.

Dalbergia sissoo. Vern. Shisham, Sissu, Tali.—A handsome tree very commonly planted as a roadside tree in Northern India. It is a spreading tree and grows wild along the hills from the Indus to the Brahmaputra ascending to 3,000 feet and over. It prefers a moist climate in the immediate vicinity of the great rivers where it grows spontaneously. It has a preference for light sandy soils and very stiff soils do not suit it. It requires much room and light to grow and grows rapidly. Both as a shade giver and as a timber and fuel tree it is excellent and it is very hardy. It is propagated by seeds and cuttings. Seeds ripen in December and January. They run about 23,000 to the seer. Sowings should be made at the beginning of the hot weather where they can be watered, or during the rains. Transplants may be made without earth. Distance apart for avenues 30 feet.

A similar kind, the "Bombay Blackwood" (Dalbergia latifolia), is a handsome tree which can be propagated in the same way and is equally useful but it is inferior as a shade giving tree.

Dillenia Indica. Vern. Motha Karmal (Már.), Kanagah (Kán.).—A small but handsome evergreen tree with a short erect bulky trunk and leaves in large tufts. Is cultivated all over India. The wood is used for gun stocks and sometimes in construction. The rough old leaves are used as polishers and the young leaves as food. The tree is grown from seed which ripens in February. The seeds run about 46,000 to the seer. Distance apart for avenues 30 feet.

Eucalyptus Tereticoruis.—This is probably the best of the Eucalyptus for use in India generally. It is very quick growing, evergreen, and succeeds well even in Bombay. It will thrive with ordinary nursery treatment and the seed can be obtained from Australia, the Government Gardens at Mauritius or probably at the Byculla Club in Bombay. It is tall, not spreading, and gives very light shade. If used in avenues the distance apart should not be greater than 20 feet.

Eugenia Jambolana. Vern. Jamun (Hind.), Jambul (Már.), Nerale (Kán.).—A very handsome large evergreen tree common throughout India. It requires moisture in the soil and is best near rivers and canals. The wood is reddish-brown, tough and hard, warps in seasoning but is fairly durable; used for building, agricultural implements, boats and canoes; the bark is used for tanning and dyeing; the fruit is much eaten by the natives, and a vinegar is prepared from it which is used in diseases of the spleen. The tree untended yields a large quantity of indifferent fruit, but, if treated as a fruit tree by grafting from selected trees, the fruit is good. The tree flowers in March—May. The seed ripens June—July. It is propagated from seed which should be sown as soon as gathered and in nurseries only. It does not require a deep soil but succeeds well on a loam soil with boulders and gravel below the surface. It is worth cultivating along the banks of rivers and in positions where water is available, as, once established, it needs very little attention. Distance apart for avenues 40 feet.

Eugenia latifolia (Vern. name not known).—Is said to give better shade but its fruit is small and almost useless.

Eugenia Munsonia.—A middle sized very beautiful tree, with pretty flowers, from the western gháts, from South Kánara to Cape Comorin; might be worth trying if seeds can be obtained.

Ficus Bengalensis. Vern. Banyan (Hind.), Wad (Már.), Alada (Kán.).—A large practically evergreen tree with glossy dark green leaves, and spreading branches which in moist climates send down numerous slender roots which descend to the ground and afterwards become trunks. The wood is not durable but is used occasionally for boxes, door panels, and well-rings. The leaves and twigs are used as fodder for cattle. The fruit is eaten during times of scarcity. It is worth noting that horses picketed under this tree have been known to be poisoned by the fruit. It may be propagated either from seeds or cuttings. The seed ripens in April-May and may be picked up under the tree, after being voided by birds, etc. Broken bricks or charcoal mixed with the soil will assist germination. Large cuttings 8 to 10 feet high may be planted at the commencement of the hot weather and well watered before and after the rains. This is a good avenue tree. Distance apart for avenues 60 feet.

Ficus religiosa. Vern. Pipal (Hind.), Ashvatha (Már.), Arali (Kán.).—Too well known to need description. Wood worthless except for fuel. Being held sacred by Hindus, is not lopped or mutilated and for the same reason cannot usually be felled. It should not be planted close to habitations or where there is any risk of religious disputes. May be propagated as the wad, but the shade being inferior

it should not ordinarily be used for avenues. Distance apart for avenues 40 feet.

Ficus Mysorensis. Vern. Bhurwar (Már.), Goni (Kán).—Similar to wad but ærial roots few. May be propagated in the same way. The leaves hold the dust. There is a large tree at the bottom of Mount Pleasant Road on Malabar Hill, Bombay. Distance apart for avenues 60 feet.

Ficus Tsiela. Vern. Pipri (Már.), Bili Basri (Kán.)—A fine evergreen tree with greyish bark and leaves and black fruit. Largely used for avenues in the drier districts. It is a large spreading tree and gives good shade. It is very hardy and will grow in some desert parts of Gujarát where no other large tree but the neem will. Reproduced from seed or cuttings as the wad. Wood worthless except for fuel.

Ficus retusa. Vern. Nandruk (Már.), Pilala (Kán.)—A handsome evergreen tree with small dark green leaves and yellow fruit. It gives perhaps better shade than any other tree in the Presidency but it does not attain the great size of the other figs, the bole seldom exceeding 10 feet in circumference. It is hardy on all sorts of ground within its own region, but that is limited to the Konkan and western Deccan; outside of these it only thrives where very well watered. It is very hardy in tolerably moist warm climates. Reproduced from seed or cuttings as the wad. Aerial roots slender.

Ficus Benjamina.—A very handsome large, spreading, evergreen tree from Assam, Andamans, Travancore, etc. Also a variety named *comosa.* Fruit red, branches drooping. Makes an excellent roadside tree and is now common in Dhárwár. Also sometimes called *Ficus Javanica.* Propagated by seed or cuttings as wad.

Ficus Glomerata. Vern. Umbar, Umra (Már.) and Guler.—Commonly called the wild fig, as its fruits resemble those of the garden fig, more than any of the other wild figs. Grows to be a large tree, but low in proportion to its bulk; and cannot exist far from water, so that it is one of the signs of a spring used by Brahmins who divine where wells should be dug. It gives a good shade and is evergreen though sometimes bare of leaves for a short time between January and April. The leaves are used for fodder and the fruit is eaten in famine times. It may with advantage be planted beside water but nowhere else. Wood lasts well under water but otherwise not durable. Seed ripens April—July. Distance apart for avenues 40 feet.

Kigelia pinnata.—Sausage tree. From Tropical Africa. Commonly planted in India. Medium size. Evergreen. Liver coloured flowers about 3″ diameter followed by gourd-like fruit hanging on long stems from the branches. Propagated from seed which ripens in August

and September and can be obtained from Bombay or Poona public gardens. The seed being very fine should be sown in pots or boxes about March and the seedlings transplanted when about a foot high. Distance apart for avenues 30 feet.

Mangifera Indica. Mango. Vern. Am.—Too well known to need description. It grows well from seed in all parts of the Presidency where its roots can reach water, but fails in deep alluvial soils where the water is at a great depth below the surface. For road side planting grafted or inarched trees are useless as they are delicate and do not grow large enough to give good shade. The fruit of a very large proportion of mangoes in the Presidency is worth little or nothing; and even with specially famed trees in private gardens where no protection from way-farers is required, the fruit is sold for surprisingly small sums. There thus appears little hope of any considerable revenue from this source. It may be noted that it is claimed both in Burma and Java that seedlings come true to the parent, but mango seed will not keep more than a short time, and therefore it would be difficult to introduce these kinds into India. The wood is readily eaten by insects, but it is used for planking, doors and window frames, and for canoes and boats. The seed should be sown in a nursery, or box filled with rich soil, and well watered. It will germinate in 15 to 20 days. The young plants transplanted during September should be watered every two or three days. The seed run about 42 to the seer. Distance apart in avenues 40 feet.

Mesua ferrea.—Vern. Nagchampa (Mar.), Naga Sampighi (Kan.). A handsome evergreen tree which grows to a large size, has beautiful white flowers and the young leaves are highly coloured, but it grows very slowly though it is long lived. It grows on the western coast from North Kánara southwards. Where used for avenues it should be placed between quicker growing trees.

Michelia Champaca.—Vern. Champa (Mar.), Sampighi (Kan.). A large, handsome, evergreen tree with sweet scented yellow flowers, which appear in the hot weather; cultivated throughout India, particularly at Hindu shrines. The wood is much esteemed for furniture, carriage work, etc. It is easily propagated from seed which ripens November-December, and may be procured from any locality where it is grown. It prefers moist districts, but is a common roadside tree at Bangalore. A seer of seeds contains about 5,800 seeds. Distance apart for avenues 40 feet.

Millingtonia hortensis.—A tall, graceful, evergreen tree with feathery dark-green leaves and clusters of white flowers. It is a native of Burma, but is cultivated in most parts of India. It is quick growing and grows with little water and in shallow soil. It is a tall growing upright, not spreading tree and does not give good shade.

The tall stem is said to be apt to be broken by the wind and the suddenness, with which it decays, is said to render dangerous to passers-by. This is not the experience to any noticeable extent in Poona where it is used largely by the roadside but suffered heavily in the famine years. It is easily grown from rootsuckers which can be dug up and planted out. The tree rarely or never seeds in this Presidency. Distance apart for avenues 40 feet.

Mimusops Elengi.—Vern. Mulsari (Hind.), Owli, Wovali (Mar.), Bakul Pagade (Kan.). A large, evergreen tree with white flowers and pretty leaves. It grows on the western gháts from Khandálla southwards. Distance apart for avenues 30 feet.

Mimusops hexandra.—Vern. Khirni (Hind.), Ranjana Raini, Rayan (Mar.). A beautiful, medium-sized, evergreen tree which grows to a great age, gives very good shade and an edible fruit. It grows well in sandy soils in North Gujerát wherever the water is not at a great depth from the surface, and ought to be tried more in Sind. The wood is heavy, hard and tough; is excellent for turning and is used for many domestic purposes. It grows readily from seed. A seer of seeds contains about 5,450 seeds.

Mitrephora Maingayi from Burma, Malay Peninsula, Java; and M. grandiflora, from the gháts of South Kánara at 2,000 feet, might be worth trying. Both are evergreen, large trees with showy flowers.

Parkia biglandulosa (local name in Empress Gardens, Poona).—Is a quick growing, evergreen tree with feathery leaves which grows well in Poona and comes readily from seed.

Peltophorum ferrugineum.—Is a quick growing, feathery leaved, evergreen tree, with beautiful yellow flowers, from the Andamans and Malay Peninsula. It grows readily from seed which can be obtained from Bombay where it makes an excellent roadside tree and flowers when quite young. It has lately been introduced into gardens in Poona where it grows rapidly and promises to form a finer tree than in Bombay, but does not flower at so early a stage in its growth. Distance apart for avenues 50 feet.

Pithecolobium saman.—The rain tree. A quick growing, large, spreading, evergreen tree with feathery leaves which close at night and during rain. It has pretty flowers. The wood is useless. It grows readily from seed and makes an excellent avenue. Distance apart for avenues 30 feet in dry climates and 50 feet in moist climates.

Poinciana Elata.—The white gold mohur. A fine tree, with feathery leaves, practically evergreen, but with rather light shade and with beautiful white flowers which turn orange as they fade. It is quick growing and will probably grow anywhere and with little water. It grows well in Bombay and better at Poona and comes from Arabia

and Abyssinia. It grows readily from seed which can be obtained in fair quantity from one tree in the grounds of the Club of Western India in Poona. Distance apart for avenues 40 feet.

Polyalthia longifolia.—Vern. Asok (Hind.), Asupal, Devidari (Guj.), Putranjivi (Kan.). A good sized, tall growing, not spreading, evergreen, handsome, shady tree with a straight trunk and long, dark-green glossy leaves; commonly planted for avenues in North India and elsewhere. The fruit is edible. It grows well from seed and thrives in stony situations. The seed ripens after the rains and should be sown quite fresh. Seed is easily procured or may be purchased at Poona. It is a good avenue tree for fairly moist districts and is a forest tree in North Guzerát. It does not transplant well and is therefore sometimes sown direct in prepared pits well manured and fenced. Distance apart for avenues 30 feet.

Pongamia Glabra.—Vern. Karanj (Mar.), Hoage (Kan.). A very handsome tree, of moderate size, practically evergreen and with pretty flowers. It grows best near water and is found naturally near rivers. With water fairly close it grows equally well in the Konkan, Guzerát and the Deccan, but it grows fairly well away from water. Grows rapidly from seed when near water. The fruit ripens in April and should be sown at once when gathered. The wood is readily eaten by insects. In Bombay island the leaves are subject to attack by a fungus. Distance apart for avenues 30 feet.

Pterocarpus Indicus.—A handsome, practically evergreen tree with pretty fragrant yellow flowers, in May to August, usually opening after rain. This is the Padouk tree of Burma and has only lately been introduced into this Presidency. Seed may be obtained from Burma or the Malay Peninsula, but it grows very readily from cuttings. Probably the Konkan will be found to suit it best. It grows rapidly in Bombay and has only lately been introduced to Poona where, though still only a plant, it promises to do well. Cuttings can usually be obtained in Bombay and strike very readily there. The wood is excellent. Distance apart for avenues 30 feet.

Pterospermum acerifolium.—A remarkably beautiful tree with very large dark-green and white leaves and white flowers. It comes from Burma and grows well and rapidly in Bombay. It has only lately been introduced into Poona, but it is worth trying in fair soil anywhere. It grows readily from seed which can be obtained in Bombay in the cold season. It is evergreen. Distance apart for avenues 40 feet.

Pterosperumum suberifolium and *P. Heyneanun.*—Are very like the last, but have smaller leaves. Seed of the former may probably be obtained in Bombay, and seed of both from the Agri-Horticul-

tural Society's gardens at Teynampett, Madras. Distance apart for avenues 30 feet.

Swietenia macrophylla.—The large leaved mahogany. A handsome, evergreen tree, tall rather than spreading, gives good shade and grows readily from seed which can be obtained at the Byculla Club, and probably elsewhere in Bombay and also at Calcutta. It is worth trying in the Konkan at least. From the appearance of the seed it is probable that it should be sown fresh. Distance apart for avenues 30 feet.

Tamarindus Indica.—Vern. Imli (Hind.), Chinch (Mar.). A fine, evergreen tree, too well-known to need description. It grows freely from seed in any soil but it is of very slow growth and the shade is not dense. Natives of this country consider its shade unhealthy. The wood, though extremely hard and difficult to work, is highly prized for many purposes. It is an excellent wood for turning and the dark coloured heartwood is very durable. The fruit is eaten, and its acid pulp is used as a medicine and is an article of commerce very largely used by the natives. It should only be planted at the roadside alternately with such trees as the neem, mango and Ficus, when it will begin to be of some use for shade at the time the others are dying. Distance apart for avenues 40 feet.

Terminalia bellerica.—Vern. Bahera (Hind.), Balra Beheda (Mar.), Jare (Kan.). The Belleric Myrobalan. A large, handsome tree, with a tall straight trunk and broad massive crown. The flowers have a strong offensive smell. It is not entirely evergreen. Common throughout India. Its yellowish wood is coarse grained and subject to the attacks of white ants and other insects; it is used in building. The fruit is a favourite food of cattle and is used in dyeing and tanning, being one of the myrobalans of commerce. It appears to grow freely from seed which ripens in the cold season. It should be sown at once and transplanted in the rains. Distance apart for avenues 50 feet.

Terminalia Arjuna.—Vern. Arjuna Kawa (Hind.), Daula Sadar (Guz.). Is not entirely evergreen. Grows to a great size near water in Guzerát and Khándesh. Otherwise similar to last. Distance apart for avenues 50 feet.

Thespesia Populnea.—Vern. Bhendi (Mar.), Huvarasi (Kan.). An evergreen tree of moderate size and dense shade, with beautiful yellow flowers. Grows remarkably well from cuttings and also from seed. It grows best in the damper parts of Western India. The wood when sound is exceedingly strong and durable, of a fine red colour and takes a good polish. Distance apart for avenues 30 feet.

Vateria Indica.—Vern. Dhupada Gugli (Kan.). Is a large, handsome, evergreen tree with showy flowers, found in the evergreen

forests along the Western Gháts ascending to 4,000 feet, and is used largely as an avenue tree below and above the gháts in the moister western districts of Mysore.

Barringtonia speciosa, *Barringtonia racemosa* Vern. Nivar (Mar.) and *Barringtonia acutangula* Vern. Tivar, Jugli (Mar.).—Are all beautiful, flowering, evergreen trees, but difficult to grow and require protection from sun until of some age. The first comes from the seashore of the Malay Peninsula, the second from the west coast of the South Konkan, and the third from Bengal. There appears to be little use in trying them at present except in the Konkan, and there only where they can be tended with care when young. There are one or two good trees in the Victoria Gardens at Bombay. The last named is a well-known avenue tree in Calcutta. Distance apart for avenues of Barringtonia acutangula 25 feet.

Spathodea companulata.—Is a beautiful, evergreen, flowering tree with good shade. But, at least in Bombay, the roots keep to the surface, and the tree is liable to be blown down by high winds. This is less the case in Poona where it also grows and flowers well. But in any case the tree has a short life. If tried at the roadside, it should be near towns only and then alternately with longer lived and stouter trees.

Cassia Sumatrana.—Is a large, evergreen tree with beautiful yellow flowers standing well above the tree. It is common at the side of roads in Poona. The chief objection to it is the untidy look of the flower stalks which remain for a year at least after the flowers have fallen. It is hardy and grows readily from seed which can be obtained in quantity in Poona.

Cassia Nodosa.—Is a beautiful flowering tree which is said to be evergreen in places, but is quite deciduous, when young, in Bombay. The flowers are pink and the tree is not, so far, easy to grow.

Cassia renigera.—Is a beautiful flowering tree with pink flowers borne in the hot weather when the tree is leafless. The tree remains without leaves for a considerable time. The seed can be obtained in Burma. It is hardly a roadside tree yet, but might be tried in towns where the beautiful flowers might compensate for its leaflessness.

Cassia Grandis.—Is also a beautiful flowering tree with pink flowers. It is less deciduous than the last and with less beautiful flowers. The seed can be obtained both in Poona and Bombay. For the roadside it is also only fit to plant between other shade giving trees.

Cassia marginata.—Is a fine flowering tree of medium size, evergreen in Poona at the Bund Gardens. It is not large enough for the roadside except alternately with others. The flowers are the

smallest of the pink flowering cassias, but still beautiful. Seed can be obtained from Poona.

Cassia Siamea.—A moderate sized tree, to some extent deciduous, with a prolonged flowering period, and light yellow flowers of a comparatively large size. Seed can be obtained from the Byculla Club in Bombay and probably from the public gardens in Bombay and Poona.

Cassia Fistula.—Vern. Amaltas (Hind.), Bahawa, Bahaya (Mar.), Kakke, Kakkai (Kan.). The Indian Laburnum. A moderate sized to small tree with beautiful yellow flowers. Its shade is never very good, and it is deciduous though never entirely without leaves. It is propagated from seed which germinates badly and is subject to the attacks of a boring weevil. The seed of all the cassias germinates with some difficulty, but probably better after keeping for some time. It is not a roadside tree except in or near towns and should then be planted alternately with shade giving trees. The seeds run about 6,400 to the seer.

Castanospermum Australe.—The Moreton Bay Chestnut. A fairly quick growing, evergreen tree with beautiful foliage and pretty flowers, which however are to some extent hidden by the leaves. It seeds at Dhárwár and Poona and Bangalore, at the last of which seed may be obtained, or from Australia. It grows well in Bombay but has not, so far as the writer is aware, fruited there. It grows readily from seed.

Casuarina Equisetifolia.—The Beef wood tree. This tree gives little shade and requires water in the subsoil though not particular whether the water is sweet or not. Its wood is only useful for firewood. It can be grown easily from imported seed or seed borne in this country. Nothing will grow under it. Distance apart for avenues 25 feet.

Colvillea racemosa.—A fine tree with feathery leaves and beautiful flowers. It is without leaves nearly all the dry season and therefore can only be used alternately with others at the roadside and near towns. It grows well at Bangalore whence seed can probably be obtained.

Bauhinias.—Vern. Kanchan, Kachnar. It is difficult to give the specific names of these. There are varieties with flowers pink, white, pink and white, yellowish white, and pink and white with dark markings. They are moderate to large sized spreading trees, more or less deciduous according to the locality. They are beautiful, both in leaf and flower. The leaf is lobed like a camel's foot. It is easily grown from seed which ripens in June or July. The seeds require much light and will not germinate in shade. It may be used occasionally with other trees in towns. Its use is barred on the roadsides in the Punjáb.

Poinciana Regia.—The Gul Mohur. Too well-known to need description. Is leafless for the greater part of the year, but may be used at the roadside in towns on account of its beautiful flowers and foliage. It is quick growing and grows readily from seed. Distance apart for avenues 30 feet.

Jacaranda Mimosifolia.—A beautiful, feathery leaved, more or less deciduous tree with beautiful blue or mauve flowers. It is used as an avenue tree at Penang, but is there entirely deciduous. It grows better and is more nearly evergreen in Poona than in Bombay. It grows readily from seed which however is difficult to obtain; probably Penang would be the best place to try or Pachmarhi. But it is hardly an avenue tree yet.

APPENDIX A.

Chapter III—Paras. 35 and 36.

Working plan of operations in district *for 1904-05 to 1908-09.*

Date ..
- Annual grant ... ... Rs. 700

Period of maintenance, 4 years including year of planting.

- Cost of planting and maintaining one mile for first year ... . Rs. 100
- Cost of maintaining, 2nd year ... ... ,, 60
- Do. 3rd and 4th years ... ... ,, 40 yearly.

Name of road.	Miles.	Year of planting.	Work to be done in 1904-05.	1905-06.	1906-07.	1907-08.	1908-09.	Remarks.
...	1—2	1902-03	Maintenance, 3rd year .	Maintenance, 4th year .	Established ...	.....	.....	
...	3—4	1903-04	Maintenance, 2nd year .	Maintenance, 3rd year .	Maintenance, 4th year .	Established .	.....	
Road ...	5—8	1904-05	To be planted with mangoes.	Maintenance, 2nd year .	Maintenance, 3rd year .	Maintenance, 4th year	Established.	
	9—10	1905-06	.....	9 Mango .. / 10 Jamun ...	Maintenance, 2nd year,	Maintenance, 3rd year .	Maintenance, 4th year .	Established in 1909-10.
	11—13	1906-07	.....	.....	11th Jamun ... / 1 th / 13th Mangoes ...	Maintenance, 2nd year.	Maintenance, 3rd year .	Do. 1910-11.
	14—15	1907-08	.....	.....	.....	Mangoes ..	Maintenance, 2nd year .	Do. 1911-12.
	16—18	1908-09	.....	.....	.....	.....	Mangoes ...	Do. 1912-13.
Summary.	Maintenance ...	4th year ...	Nil ... ... Rs.	2 miles Rs. 80	2 miles Rs. 80	4 miles Rs. 160	2 miles Rs. 80	
	Do. ...	3rd ,, ...	2 miles 80	2 ,, 80	4 ,, 160	2 ,, 80	2½ ,, 100	
	Do. ...	2nd ,, ...	2 ,, 120	4 ,, 240	2 ,, 120	2½ ,, 150	2 ,, 120	
	Planting ...	.....	4 ,, 400	2 ,, 200	2½ ,, 250	2 ,, 200	3 ,, 300	
	Nurseries and reserve.	.....	100	100	90	110	100	
			700	700	700	700	700	

Notes.—(1) The—road is 18 miles long with no existing avenues. It runs through loam suitable for mangoes, except miles 10 and 11 which are low-lying and will be planted with jamun, and half of mile 13 which is bad soil and will be left unplanted.

(2) Stock for 1904-05 is present in the nursery, and additional stock to be provided there as follows :—

In 1903-04 mangoes for 1 mile, jamun for 1 mile.
In 1904-05 do. 1½ do. do.
In 1905-06 mangoes for 2 miles.
In 1906-07 do. 3 ,,

EXPLANATIONS TO APPENDIX A.

This plan providing for work from July 1904 is supposed to have been submitted in 1902. It is prepared as follows :—

The data are ascertained by experience gained in the district; those in the specimen are purely conjectural and should not be used as the basis of calculation unless experience has shown them to be suitable.

The avenues planted in previous years and requiring maintenance are first entered in the column for the first year; their cost in accordance with the data is shown in the summary, and the balance of the annual grant (after providing for nurseries and a reserve to meet unforeseen charges) is devoted to new planting. Each year's work is thus fixed in turn, provision being made for maintenance and the amount of fresh planting being determined by the available balance.

The road is supposed to have been selected after inspection during which the most suitable trees have been determined, and provision is made in the second note for raising an adequate stock of young plants in the nurseries.

Planting and maintaining groves and plantations, filling in gaps in avenues, pruning and other work as required should be entered in this form.

Where a simpler form of working plan is desired, the work to be done year by year for five years may be entered in such detail as may be thought necessary under each year. In preparing this simple working plan care must be taken to bear in mind the purpose which they are intended to fulfil, *viz.*, to ensure that no more planting shall be done in any year than the funds available in subsequent years will suffice to establish.

APPENDIX B.

Form of Control Book.

Record of Arboricultural Operations in the _____ Táluka.

Provisions of Plan of Operations.			Result of Operations.			
Year in which to be carried out.	Description of work.	Cost.	Description of work.	Cost.	Date of inspection.	Blank sheet for entry of remarks by Inspecting Officer, and note of any observations and suggestions bearing on the work, with date of entry.
	1886.	Rs.		Rs.		
	Five nurseries to be maintained and replenished.	360	Carried out	300		The ___ nursery should be extended by another acre to meet demands for seedlings by zamindars. The nursery at _____ shows signs of insufficient irrigation; and the nursery at _____ is much in want of weeding. The Eucalyptus seed sown in January has only partially germinated, and of the species selected E. *Globulus* and *Viminalis* are unsuited to the locality. E. *Citriodora* and *Resinifera* might be tried, if plants are still wanted for the ornamental garden at _____
	Formation of nursery 1½ acres in plot II.	322	Nursery formed, 1½ acres only; fenced with ditch, etc.	325		
	New nursery on ___ road ...	424	Made	410		
	Maintenance of plantation X ...	122	Fence not repaired, otherwise properly maintained.	72		
	Do. Y ...	254	Maintained	250		
	Fifty acres, at ___ to be sown with shisham and enclosed.	1,142	30 acres only sown, watered and fenced.	920		The whole area of 30 acres is thoroughly stocked with vigorous seedlings, with exception of a patch of about 3 acres near the centre, where the soil is bad and covered with a saline efflorescence. This plot should be planted with the "Salt bush."
	200 acres at ___ to be sown ...	300	200 acres ploughed up and sown ...	284		Large numbers of the seedlings have been killed by frost, and the blanks should be filled up by fresh sowings in the spring of 1887.
	Maintaining and watering 2 groves on ___ road.	86	Properly maintained and gaps in fences filled up.	91		
	Planting 50 shisham trees round hospital at _____.	29	50 trees planted and fenced ...	25		
	Planting one acre at _____ ...	150	1 acre planted and enclosed with fine fence; watered April and May.	130		
	Pruning trees along 5 miles of ___ road.	50	Pruning done	45		The branches have not been cut off close to the trunk, and the pruning has been done during April and early part of May, instead of the winter. The jagged stumps of the branches should be removed next November.
	Planting 1,000 trees in avenue along ___ road.	955	920 trees planted and fenced; 953 new wicker gabions erected and 2,030 old ones repaired; 920 gharras buried, and trees regularly watered from February to June and in September.	1,003		Many of the plants have been put too deep into the soil, and in some cases they have been insufficiently watered.
	Planting a mile of avenue along ___ road.	275				

APPENDIX C.

Chapter III—Para. 37.

Arboricultural Working-Plan.

District_____

(2) Abstract estimate for Arboricultural Operations during the year 19 -19 .

(Yearly Abstract Statement for all operations mile by mile and road by road.)

Name of Road.	Nurseries.	Planting out.	Maintenance.	Miscellaneous.	Total.	Remarks.
	Rs.	Rs.	Rs.	Rs.	Rs.	

Executive / District Engineer.

APPENDIX D.

Chapter I—Paragraph 3.

II.—Statement showing arboricultural receipts and expenditure during the financial year 19 -19 in district.

Receipts.	Budget (*b*).			Actual.			Expenditure.	Budget.			Actual.			Remarks.
	Rs.	a.	p.	Rs.	a.	p.		Rs.	a	p.	Rs.	a.	p.	
Sale of trees cut down ...							Supervision (clerks, overseers and allowances)							
Sale of fallen trees... ...							Servants (malis, bhistis, etc.) ...							
Sale of loppings							Cooly labour							
Income from roadside grass ...							Cost and carriage of seeds and plants							
Other income from annual produce (fruits, lac, etc.) ...							Construction of wells ...							
Miscellaneous receipts (*a*) ...							Fencing							
							Tools and plant							
							Miscellaneous (*a*)							
Total ...							Total ...							

(*a*) Explain large miscellaneous receipts or expenditure in remarks column.
(*b*) Where receipts have been budgetted in a lump sum, this column can be left blank excepting the entry for total receipts.

b 1077—12

No. I.

Progress Statement of Nurseries for the Quinquennial period 19 to 19 .

1	2	3					4					5	6
		Additions during the period.					Deductions during the period.						
District or Division.	Area under nurseries at the beginning of the quinquennial period.	Corrections of areas as recorded.	Extension of nurseries.	Transfers from other heads.	Other causes.	Total additions.	Corrections of areas as recorded.	Failures.	Transfers to groves, plantations or gardens.	Other causes.	Total deductions.	Area remaining at end of the quinquennial period.	Remarks.
	Acres and decimals.	Acres and decimals.	Acres and decimals.	Acres and decimals.	Acres and decimals.	Acres and decimals.	Acres. and decimals.	Acres and decimals.	Acres and decimals.	Acres and decimals.	Acres and decimals.	Acres and decimals.	

Note.—A marginal note should show details when necessary.

No. II.

Progress Statement of Plantations for the Quinquennial period 19 to 19 .

1	2	3	4						5						6	7
			Additions during the period.						Deductions during the period.							
District or Division.	Area taken up for plantations at the beginning of the quinquennial period.	Area successfully stocked at beginning of the period.	Corrections of areas as recorded.	Successfully sown or planted.	Transfers from nurseries, groves or gardens.	Transfers from other management.	Other causes.	Total additions.	Corrections of areas as recorded.	Failures.	Transfers to other heads.	Transfers to other management.	Other causes.	Total deductions.	Area stocked at the end of the quinquennial period.	Remarks.
	Acres and decimals.	Acres and decimals.	Acres and decimals.	Acres and decimals.	Acres and decimals.	Acres and decimals.	Acres and decimals.	Acres and decimals.	Acres and decimals.	Acres and decimals.	Acres and decimals.	Acres and decimals.	Acres and decimals.	Acres and decimals.	Acres and decimals.	

Note.—1 A marginal note should show details when necessary.
2 . In column 7 give the details of 'failures' shown in column 5, thus-(i) Deforested for profit or works. (ii) Irrigated. (iii) Unirrigated.

No. III.

Progress Statement of Groves for the Quinquennial period 19 to 19 .

1		3						4						5	6
		Additions during the period.						Deductions during the period.							
District or Division.	Area of groves at the beginning of the quinquennial period.	Corrections of areas as recorded.	Successfully planted.	Transfers from other heads.	Transfers from other management	Other causes.	Total additions.	Corrections of areas as recorded.	Failures.	Transfers to other heads.	Transfers to other management.	Other causes.	Total deductions.	Areas stocked with trees or plants, alive at the end of the quinquennial period.	Remarks.
	Acres and decimals.	Acres and decimals.	Acres and decimals.	Acres and decimals.	Acres and decimals.	Acres and decimals.	Acres and decimals.	Acres and decimals.	Acres and decimals.	Acres and decimals.	Acres and decimals.	Acres and decimals.	Acres and decimals.	Acres and decimals.	

Note.—A marginal note should show details when necessary.

IV.

Progress Statement of Avenues for the Quinquennial period 19 to 19 .

1	2	3	4					5						6	7
			Additions during the period.					Deductions during the period.							
District or Division.	Length of roads and canals suitable for avenues.	Length of roads and canals fully stocked with trees at the beginning of the quinquennial period.	Corrections of lengths as recorded.	Successfully planted.	Transfers from other management.	Other causes.	Total additions.	Corrections of lengths as recorded.	Failures.	Felled.	Transfers to other management.	Other causes.	Total deductions.	Length of roads and canals fully stocked with trees or plants alive at the end of the quinquennial period.	Remarks.
	Miles and decimals.	Miles and decimals.	Miles and decimals.	Miles and decimals.	Miles and decimals.	Miles and decimals.	Miles and decimals.	Miles and decimals.	Miles and decimals.	Miles and decimals.	Miles and decimals.	Miles and decimals.	Miles and decimals.	Miles and decimals.	

Note.—A marginal note should show details when necessary.

No. V.

Income from Arboriculture during the Quinquennial period 19 to 19 .

1	2	3	4	5	6	7	8
District.	Ornamental Gardens (Including canal rest-house compounds).	Nurse-ries.	Plan-tation.	Groves and avenues.	Miscell-aneous.	Total.	Remarks.
	Rs.	Rs.	Rs.	Rs.	Rs.	s.	

No. VI.

Expenditure on Arboriculture during the Quinquennial period 19 to 19

1	2	3	4	5	6	7	8	9	10	11	12
District.	Works.								Establishment.	Total.	Remarks.
	Ornamental gardens (Including canal rest-house compounds).		Nurseries.		Plantation and afforestation.		Groves and avenues.				
	Maintenance and repairs of existing gardens.	Extension of gardens.	Maintenance and repairs of existing nurseries.	Extension of nurseries.	Maintenance and repairs of existing plantations and afforestation.	Extension of plantation and afforestation.	Maintenance and repairs of existing groves and avenues.	Extension of groves and avenues.	General supervising establishment, including office establishment.		
	Rs.	Rs.	Rs.	Rs.	Rs.	Rs	Rs.	Rs.	Rs.	Rs.	

APPENDIX F.

Chapter XXI—Paragraph 207.

Register of trees planted.

Táluka Name and class of road.

Name of planter with parentage caste and residence.	Year of plantin.	Kind of tree.	Number of trees.	Position of trees.				Date of entry in register.	Remarks.
				Mile and furlong.	Side of road.	Village.	Survey number of plot.		
1	2	3	4	5	6	7	8	9	10

APPENDIX G.

Chapters II and XXI—Paragraphs 32 and 205 (*4*).

Form of sanad of ownership of trees planted by private persons on Government roads in district.

Serial number.	Name of planter, father's name, caste and residence.	Name and class of road on which trees have been planted.	Táluka and village where the road is situate.	Survey number of plot or nearest plot.	Number of mile and furlong.	Kind of trees planted.	Number of trees planted.	Condition on which the sanad is granted.
								The trees planted are the property of the planter and his successors, but he will not have power to lop or fell without the permission of the Chairman of the District Board, and he will have no claim to the land on which the trees stand. He will, however, be entitled to take the fruit and all dry or fallen wood as well as all lopping made in the ordinary course of arboricultural operations. The conditions on which trees were planted are noted on the next page.

Dated *191* .

Chairman, District Board.

Conditions on which trees were planted.

1. Only trees of a kind or kinds approved by the Chairman of the District Board and specified in the permission shall be planted.

2. The planting shall not be done by seed or by seedlings of less than two years' growth.

3. The trees shall be planted in regular lines and at such distance from each other and from the middle of the roadway as the Chairman of the District Board may prescribe.

4. The planter shall provide for the irrigation and protection of the trees until they grow sufficiently large to need no more attention.

5. On planting a tree the planter shall give intimation to the Mámlatdár concerned specifying the kind of tree planted and its position.

6. When the trees planted under the above conditions have grown sufficiently to be no longer in need of irrigation or protection, the planter shall be entitled to obtain from the Chairman of the District Board a sanad declaring his ownership of the trees.

APPENDIX H.

Chapter II—Paragraph 32.

Scale of Rewards sanctioned for the Amritsar District by the District Board.

To Zaildars, by whose interest the best results were attained—

1st year, a khushnudi parwana from Deputy Commissioner.

2nd year, a dopatta and a parwana from Deputy Commissioner.

3rd year, money reward ranging from 20 to 50 rupees.

6th year, money reward and a parwana signed by the Commissioner.

To Village Communities—

Rs.

75 for a grove of not less than 2,000 timber trees of five years' growth.

100 for a grove of not less than 2,000 timber and fruit trees of five years' growth.

40 for a grove of not less than 1,000 timber trees of five years' growth.

50 for a grove of not less than 1,000 timber and fruit trees of five years' growth.

To Individuals.—

Any person planting a plot of land one bigah in area with timber and fruit trees, or only timber, shall receive—

1st year Rs. 6		
2nd „ „ 5		Trees to be planted not less than 30 feet apart.
4th „ „ 3		
6th „ „ 2		

For plots less than one bigah, but not less than half a bigah—

			Rs.	a.	p.
1st year	...	...	... 3	0	0
2nd year	...	...	... 2	8	0
4th year	...	...	... 1	8	0
6th year	...	...	... 1	0	0

For avenues of not less than 100 trees the same rewards as for a bigah.

APPENDIX I.

Chapter VII—Para 76.

Simple Insecticides.

1. Kerosine emulsion.—Mix two *chataks* of hard soap (or soft soap) in half a gallon ($2\frac{1}{2}$ seers) of boiling water. Stir till the soap is well dissolved. Then add at once one gallon of kerosine oil. Churn the mixture vigorously till it becomes creamy. *This forms a stock solution.* For use, add eight parts of water to one part of this stock solution.

2. Copper sulphate solution.—Take two *chataks* of copper sulphate (tuntia), which may be purchased in any bazaar. Dissolve in half a gallon ($2\frac{1}{2}$ seers) of boiling water. Add two gallons of cold water for use.

3. Tobacco water.—Boil four *chataks* of dried tobacco leaves in half a gallon of water for about half an hour. Dissolve in this one *chatak* of hard soap. Add three gallons of cold water for use.

APPENDIX J.

The following Circular of instructions is printed for information. It was adopted by Government in 1878, and the methods laid down have proved very successful in the Ahmedabad and Khandesh Districts. These methods demand a fairly certain rainfall and should be adopted only where the officers concerned are satisfied that they are, in the particular locality, more efficient and economical than those prescribed in this manual:—

"CIRCULAR.

No. 1253-B of 1875.

From

L. R. ASHBURNER, ESQ., C.S.I.,
Revenue Commissioner, N. D.;

To

THE COLLECTOR OF KHANDESH.

Camp Thana, 5th April 1875.

Sir,

There is now a large expenditure of Local Funds on tree-planting in every district of the Northern Division, and it is very unsatisfactory to observe the small results which are attained, owing chiefly to want of experience. A Collector may, after years of patient experiment, discover the art of cultivating trees with success, but he passes away and the experience which he has acquired and perhaps paid dearly for dies with him; his successor has to begin *de novo* and to pass through the same painful series of mistakes and failures on which so much money and energy had been expended.

2. I have made the cultivation of trees my particular study for the last 13 years and after trying many experiments and wasting much money I at last fixed upon a method which was proved to be both economical and successful, and if Collectors only give it a fair trial, I am convinced that we shall have very different results to those of the past ten years. The following are the instructions which I request may be carefully attended to:—

(1) Prepare not less than 5,000 pots 18 inches deep by 9 inches in diameter, fill these with the soil which is most common on the road to be planted, but if it is black soil, there must be sufficient murum or light soil mixed with it to prevent it cracking when dry.

Memo.—No holes are necessary in the bottom of the pots.

(2) Place these pots at 2 or 3 convenient places on the road to be planted, where water can be easily procured from a tank or stream. If the water has not to be raised from a well one man can look after 2,500 pots for the object is to give the trees as little water as possible, consistent with a healthy growth. If they get too much water they grow up rapidly and are too weak to stand; when this is the case do not permit them to be supported, cut them down as low as may be necessary to enable them to stand without support.

(3) In the month of May or June sow in these pots 3 or 4 seeds of the following trees:—

Mango, Neem, Tamarind; Rian, Kunjia for North Gujarat.
Bhendi for the Konkan.

and when they have grown about a month, weed out all but two of the most healthy plants. I have no objection to the plantation of any other kinds of trees which are found to grow well in any particular locality. The Asoka for instance is a very handsome tree and, if planted in soil suited to it, is well suited to a road side, but care should be taken not to plant trees of rapid growth, and short life like the Buckam.

(4) Plant a thick hedge of cactus (pan kattia) round this nursery of trees and continue to water them sparingly till the monsoon of the following year; they should be then about 2 or 3 feet high. If they are higher than this they have had too much water, and will not thrive so well as trees that have been fed less liberally.

(5) After the first two months the pots will require to be moved every ten or fifteen days, for it will be found that although there are no holes in the bottom of the pots, yet the roots will have grown through the earthenware into the soil and it will be impossible to transplant them.

(6) Immediately after the first fall of rain in the same season as the seeds are planted in the pots, prepare circular enclosures 10 feet in diameter, 40 feet apart, on the road to be planted. These enclosures should be of cactus (pan kattia) or milk bush (Thor) not prickly pear and should be allowed to grow till the following monsoon. Insist on the enclosures (alis) being not less that 10 feet in diameter; the trouble and expense are greater at first but they are well repaid by the protection which wide hedges afford to the young trees from cattle and camels.

(7) After the trees have been in the pots for a year wait till the soil is well saturated by the monsoon, and then plant them out

in the prepared enclosures *without removing them from the pots*, but merely breaking the bottoms of the pots. If, in the operation of breaking the bottom, the sides of the pot should be broken, put it together and bury it round the young tree. It will keep the soil together and prevent it cracking in the hot weather.

(8) From the time the tree is thus planted out, *do not give it a drop of water*. If the monsoon should entirely fail for a month or six weeks, many of the trees will fade, and some will die, but do not be pursuaded on any consideration to employ Bhistis. It will cost less to let the trees die and to replant in the following year and moreover more trees will die if watered by Bhistis than if left without water, and many of those that appear dead will be found to revive during the monsoon. This seems so improbable, that some explanation is required. If an abundant and regular supply of water can be ensured to a tree it will of course thrive better than a tree that has none; but experience has proved that in a long line of road it is impossible to supervise the Bhistis efficiently; they may be active and zealous but sooner or later the time comes when the Bhisti or his bullock falls sick and whilst the inevitable correspondence goes on about appointing his successor, the trees are deprived of their water for a few days, and when the new Bhisti arrives, they are all dead. An examination of these dead trees will now afford a useful lesson. It will be found that instead of striking their roots down into the soil in search of the moisture, the roots have all remained within a few inches of the surface where they have been accustomed to be fed by the Bhisti and having been accustomed to depend on this supply they perish immediately it is stopped.

(9) After the trees have been once planted out the only expense will be keeping the hedges in repair. In a well cultivated country this may be done by the Pátils of the villages on the sides of the roads, but much will depend upon the personal influence of the Collector or his Assistants; the Patils will undertake the care of the trees from one man and will soon take the real interest in the work of tree planting, while they will be utterly indifferent to the orders of another. If the Collector will take the trouble to have a list of the trees made and personally entrust not more than 6 or 7 to each cultivator, he will be surprised and pleased to find how soon they begin to take an interest in the trees, and to emulate each other in their care. It is well known to be a religious duty with Hindus to plant trees, and this feeling should be often appealed to. The Patils should be promised a pugree in the event of the trees being found to thrive under their care, and it should be presented to them annually at the Jamabandi with remarks of approval. A stone tablet should be erected in a conspicuous place recording the year in which the road was planted,

and the names of the Patils who have been most active in the work. This will be found to give a great stimulus to the plantation.

(10) Care should be taken not to plant mangoes on a rocky or shallow soil. There is no soil so poor that it will not grow a Neem or a Tamarind; they should therefore be selected for the murum or rocky soil. Peepul, Pipri and Bur will not easily grow from seed; but after the first fall of rain young plants may be collected in great quantities under these trees, and may be transplanted into pots with great ease. The seeds appear to require to be passed through the bowels of birds before they will *germinate.* In the light soils of Ahmedabad and Kaira, Peepul, Pipri and Bur will grow *tolerably well* from cuttings, but they never thrive so well as when planted from seedlings. The most that can be said of them is that they are better than no trees at all. If they are planted, the branches should be selected with pendent rootlets attached, and should be at least 12 feet high to give them a good start and be beyond the reach of cattle; if of this height and deeply planted in the earth, they need not be hedged, a few thorns tied to them to prevent the cattle from rubbing against them will be sufficient. The Nandrook tree grows well from cuttings and is good road side tree, but it is seldom found above the Ghats. There is one fine tree at Hindroon near Arvi in Khandesh which supplies all the Nandrook now growing on the Agra road and the latter are big enough to afford cuttings.

(11) Care should be taken not to allow the hedge round the young trees to grow so high as to smother them, and, if there is any high grass by the side of the road, it should be carefully burnt. If this is done in March before the grass gets too dry and on a still day a man can control the fire and beat it out when it approaches too near the trees with a branch of pullas or other leafy tree. If this is neglected the trees are likely to be injured by accidental fire during the hot season. I request you will provide the necessary funds for planting at least 5,000 trees in pots by reappropriation during the coming monsoon and take immediate measures to prepare the pots and hedges as soon as the monsoon has well set in. I will in future sanction no money for tree planting except in the manner I have above described. It will be necessary until the Patils have begun to take an interest in the trees to appoint one or more Inspectors of trees; and the Kulkarnis and Patils also should be required to send in monthly reports of the state of the trees and their hedges in their charge. Fine should be inflicted for neglect and dismissal for persistent disobedience of orders.

(12) If the young trees suffer from rats, poison them with arsenic placed in their holes, but when this is done it should be

done for the whole line of road on one day ; for, if there are any survivors, they will not again touch the poison. Porcupine will sometimes destroy trees after they have grown for 4 or 5 years; the best way of protecting them is to strengthen the hedges with Bori thorns.

(13) Where the road passes over a country impregnated with salt, like the Gogo and Ahmedabad road, the trees should be planted on the sides of the embankment and where there is a little or no embankment Peelu should be planted ; it will grow well on a salt soil.

(14) The pots should cost about 1½ annas (at least that is what they cost in Khandesh) and the cost of pot, planting the tree in the pot, keeping it for a year, and then planting it out with a hedge averaged four annas per tree.

I have, etc.,

(Signed) L. R. ASHBURNER,
Revenue Commissioner, N. D."

BOMBAY: PRINTED AT THE GOVERNMENT CENTRAL PRESS.